杰美康机电
JUST MOTION CONTROL

2024
LINEAR MOTOR CATALOG

SHENZHEN JUST MOTION CONTROL ELECTROMECHANICS CO.,ITD

Address: Building B,Jiayu Technology Park,Jin' an Road,Matian Street,Guangming district ,Shengzhen, China(postcode:518106)
Tel: 86-755 26509689 86-17722603980
Fax: 86-755 26509289
Website: www.jmc-motion.com/www.jmc-motor.com
E-mail: oversea@jmc-motion.com

Company Profile

Shenzhen Just Motion Control Electromechanical Co., Ltd. was established in 2007. It is a national high-tech enterprise specializing in the research and development, production and sales of motion control products. The factory is headquartered in Shenzhen, Guangdong Province.

The company mainly develops, produces and sells digital stepper motor drivers, hybrid step-servo systems (closed loop stepper), low-voltage AC servo systems, high-voltage AC servo systems, integrated stepper motors, integrated AC servo motors, CANopen/EtherCAT bus stepper, CANopen/EtherCAT bus servo, EtherCAT bus controller, motion controller and other products.

Vision: To become a leader in motion control products and personalized solutions for intelligent equipment control.

Mission: To continuously create more cost-effective intelligent products for the benefit of customers, promote industrial civilization, and benefit mankind.

Company History

2008
◆Company was formally established.

2009
◆ The development of M series low-voltage stepper drivers

2010
◆High-voltage driver and low-voltage servo driver have been production.

2011
◆ Participated in the SPS
◆ Launched hybrid step-servo motor drive.

2012
◆ Factory relocated to Bao'an District, Shenzhen.
◆ Launched AC servo system.

2013
◆ Won the honor of national high-tech enterprise.
◆ Launched DM digital stepper driver.

2014
◆ Launched integrated stepper motor and integrated servo motor.

2015
◆ Planning the research and development of CANopen, EtherCAT bus stepper and servo.

2016
◆ Launched CANopen, EtherCAT bus stepper and step-servo.

2017
◆ Started production of linear motors.
◆ Won National high-tech enterprise second time.

2018
◆ Launched CANopen, EtherCAT bus type controller
◆ Launched 4/6 axis pulse motion controller.

2019
◆ Launched CANopen, EtherCAT bus stepper, servo, and integrated motors.

2020
◆ Relocated to a larger plant (total area of 16,000㎡).
◆ Won Competitive Brand in Motion Control Field.

2021
◆ Launched waterproof closed-loop stepper motor.
◆ Launched five-phase step-servo drive.

2022
◆ Launched JAWD dual axis servo driver.
◆ Launched JALD linear servo drive

2023
◆ The large controller TX201 was successfully developed and launched on the market.

APPLICATION AREA

Biological equipment

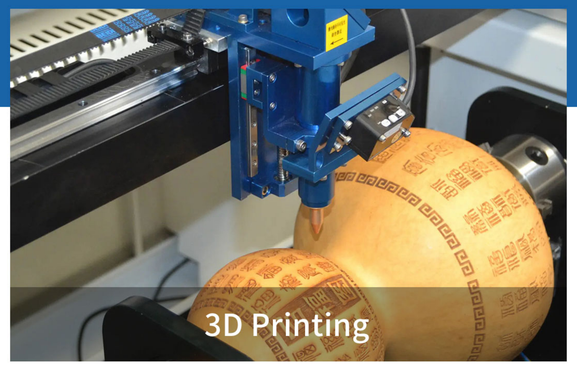
3D Printing

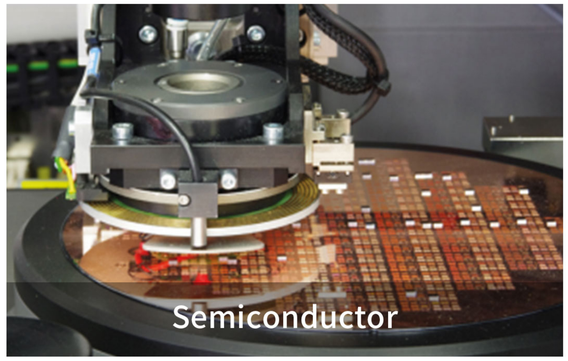
Semiconductor

Laser machine

Welding machine

Measuring instrument

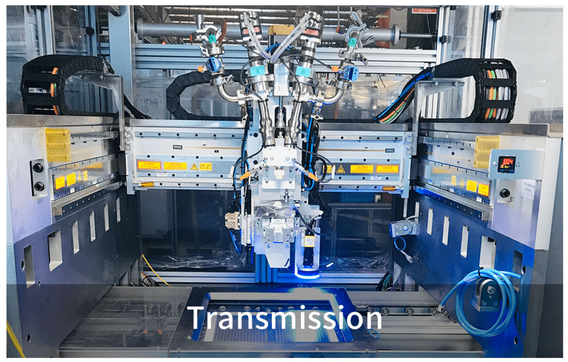
Transmission

Medical industrial

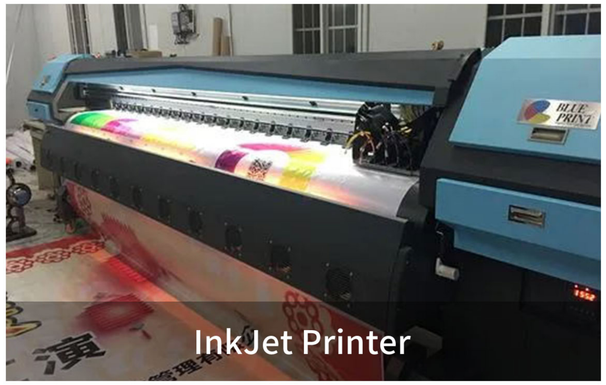
InkJet Printer

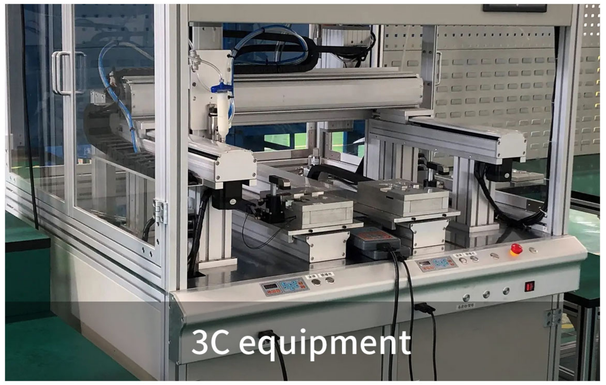
3C equipment

Lithium battery

Solar energy

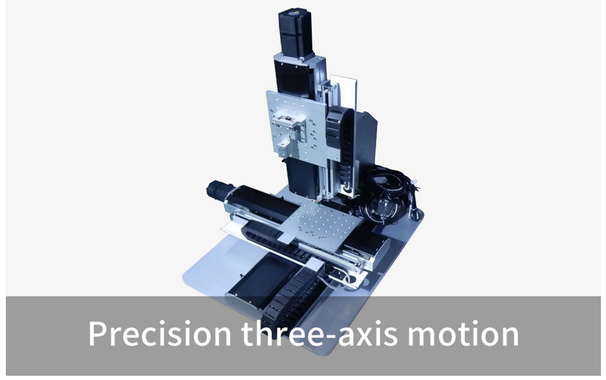
Precision three-axis motion

Gantry milling machine

Laser cutting

Engraving machine

CONTENT

杰美康机电
JUST MOTION CONTROL

01 MODULE DETAILS

MODULE DETAILS

LINEAR MOTOR MODULE P1
APPLICATION CASES P5
ASSEMPLE MANUAL P7

02 J90 LINEAR MOTOR

J90 SERIES

NAMING RULE P13
J90-JXD096-038-020-TXXX P15
J90-JXD180-038-020-TXXX P17
J90-JXD266-038-020-TXXX P19

03 J110 LINEAR MOTOR

J110 SERIES

J110-JXD096-053-035-TXXX P21
J110-JXD180-053-035-TXXX P23
J110-JXD266-053-035-TXXX P25

04 J145 LINEAR MOTOR

J145 SERIES

J145-JXD096-060-TXXX P27
J145-JXD180-060-TXXX P29
J145-JXD266-060-TXXX P31

05 J170 LINEAR MOTOR

J170 SERIES

J170-JXD096-080-TXXX P33
J170-JXD180-080-TXXX P35
J170-JXD266-080-TXXX P37

06 J210 LINEAR MOTOR

J210 SERIES

J210-JXD096-100-TXXX P39
J210-JXD180-100-TXXX P41
J210-JXD266-100-TXXX P43

Linear motor Parts

JMC Mover

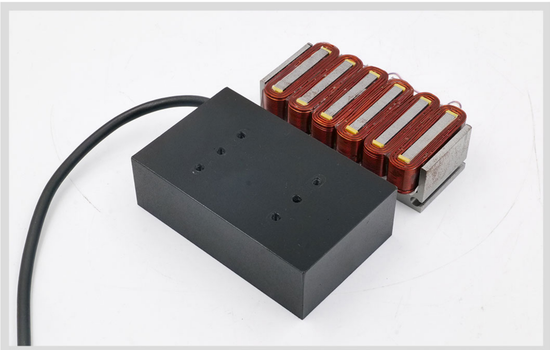

Mover	JXD096	JXD180	JXD266
Model	JXD096-038-020	JXD180-038-020	JXD266-038-020
	JXD096-053-035	JXD180-053-035	JXD266-053-035
	JXD096-060	JXD180-060	JXD266-060
	JXD096-080	JXD180-080	JXD266-080
	JXD096-100	JXD180-100	JXD266-100

JMC Stator

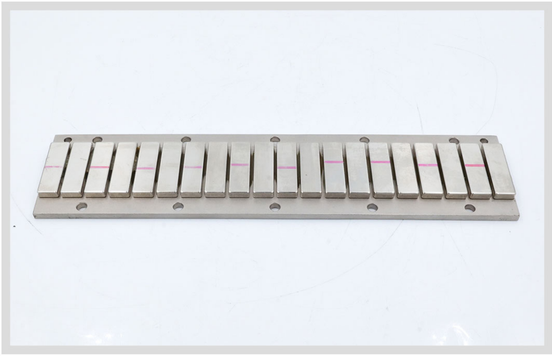

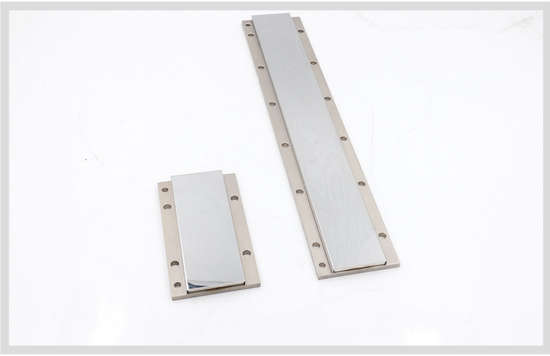

Trip (mm)	60	120	180	240	300	360	420	480	540	600	660	720	780	840	900	960	1020	1080

JMC Rail / Slider

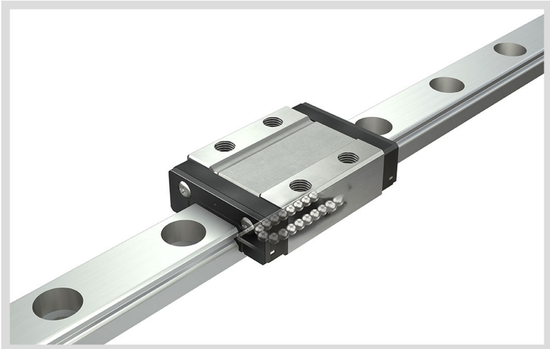

Magnetic / Optical ruler / Read head

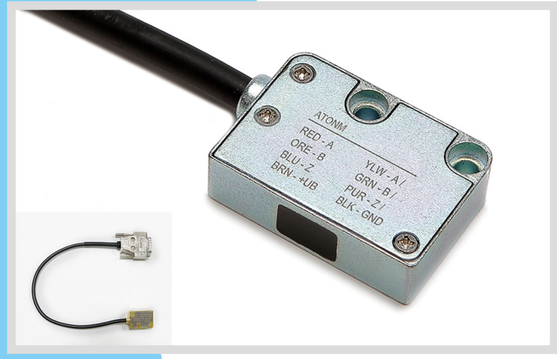

JMC Module

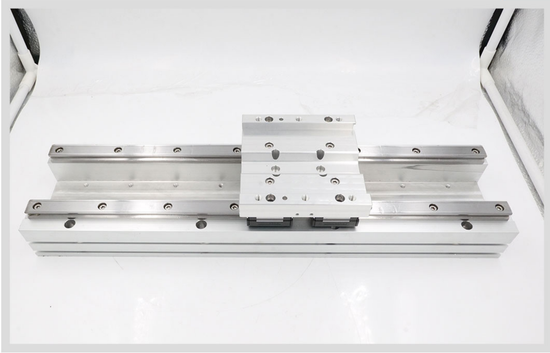

DEMAND DISCRIPTION

Linear motor selection Table

Date:

Company:	Phone number:	Contact:	Title:
Application area:		More than one mover	☐Yes, Quantity: ____ ☐No
Working environment	☐Normal ☐Dustless, Class____ ☐Vacuum, Class____ ☐Other_____	Dustless Proof	☐No ☐Metal plate ☐Sheathed cable
		Drag Chain Installation	☐ No ☐ Level ☐ Vertical
Stage type	☐Single Axis ☐XY Axis ☐Gantry (Single Motor) ☐Gantry (Dual Motor) ☐Other_____	Driver's voltage	☐110V ☐220V ☐Other_____V
		Control Type	☐Pulse ☐II/O ☐Bus type
		Usage	☐Point to point ☐Scan
Load (kg)	☐Weight: _____Kg ☐X_____0_____ Y_____0_____ Z_____0_____	Special measurement Demand	☐Straightness (Level) _____μm ☐ Straightness (Vertical) _____μm ☐Pitch_____ arc-sec ☐Yaw_____ arc-sec
External force value kg/ (N)	☐No☐Yes: _____	Sport Curve:	Distance:_____mm Moving time:_____sec Stop time:_____sec
Max Speed	_____ (m/s) / (rad/s)		
Acceleration	_____ (m/s²) / (rad/s²)		
Working time	_____S		
Itinerary	_____mm (Effective Length/		
Repeat positioning accuracy (Compensation)	☐Single Direction: ____ (μm) / ☐Dual Direction: ____ (μm)		
Accuracy (Compensation)	_____ μm	Competing products: _____	
Encoder type	☐Analog Signal ☐Digital Resolution _____ μm	Specification: _____	
Installation Direction	☐Level ☐Vertical	Remark:	
	☐ ☐ Wall-mounted		
Recommend Result:			

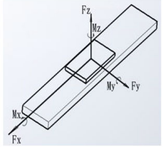

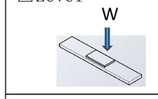

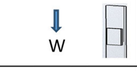

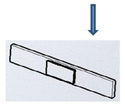

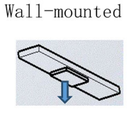

W W

MODULE EXPLODED VIEW

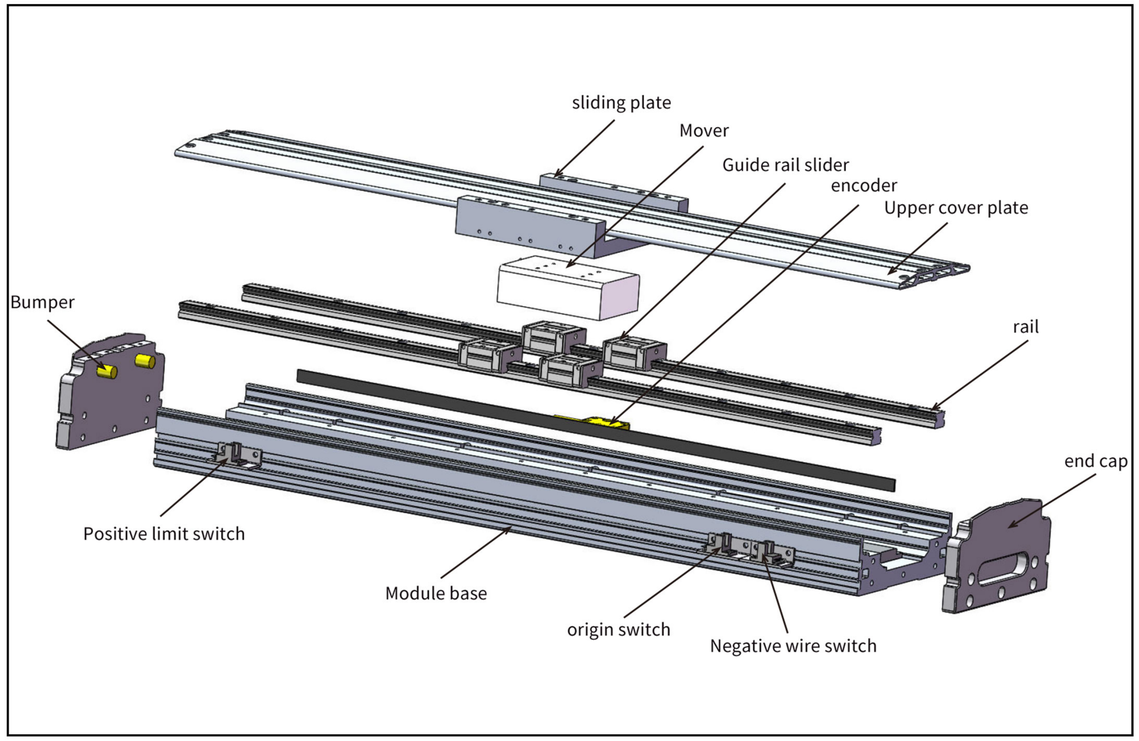

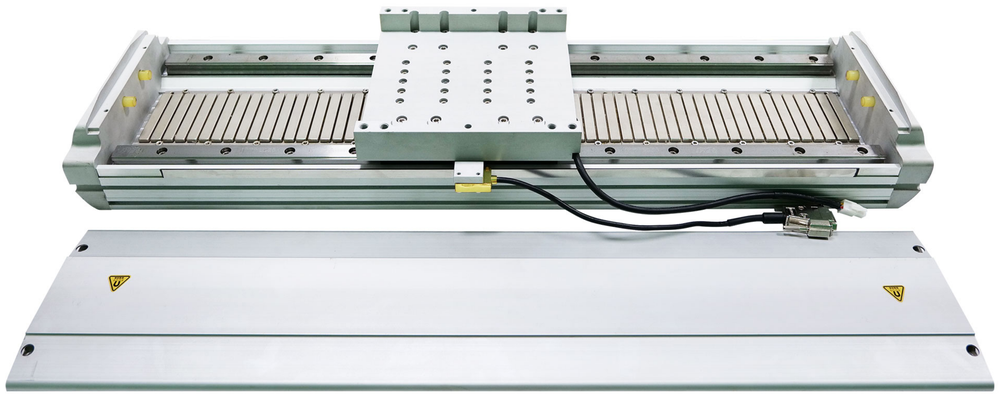

Compeleted Product

Application cases

Cyber UV printer application

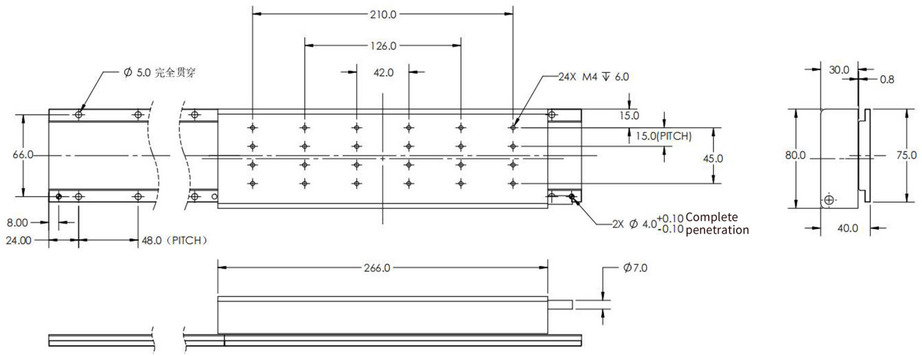

Demanding Value:

◆ Load 30-50kg; Maximum stroke 650mm;
◆ Maximum speed 2000mm/s;
◆ Maximum acceleration of 10m/s/s;
◆ Acceleration time of 0.1S; Stay time of 0.1 seconds;

Selection Result:

The main configuration for selecting a linear motor is:
◆ 1 motor JXD266-080
(Continuous thrust of 400N, peak thrust of 1129N);
◆ 16 stators JXD096-080-TL288;
◆ 1 Nideco reading head PSLH080-0SC
◆ 1 Nideco magnetic grating measuring 4.2 meters

Application of Handling Equipment

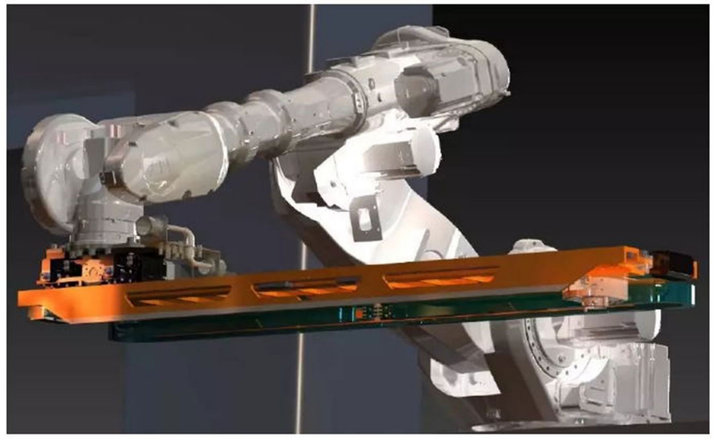

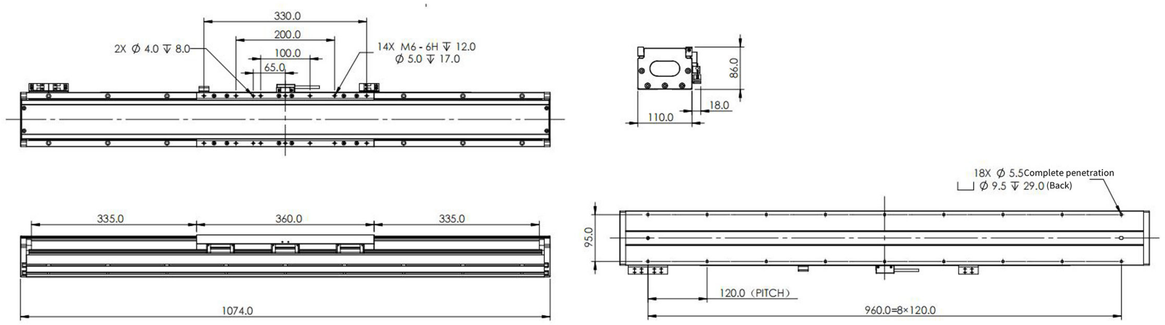

Demanding Value:

◆ Load 20kg; Maximum stroke 650mm;
◆ Move 650mm from A to B, stop at point B for 300ms, move 650mm from B to A, stop at point A for 300ms. One cycle lasts for a total of 1.6 seconds. The maximum speed is 2000mm/s and the maximum acceleration is 12m/s. The repeated positioning accuracy is 0.005mm.

Selection Result:

◆ Selected linear motor module: J110-JXD350-053-035-T650-01
◆ Corresponding linear motor actuator: JXD350-053-035
(continuous thrust 315N, peak thrust 945N);

Assemple manual

Module’s bottom view

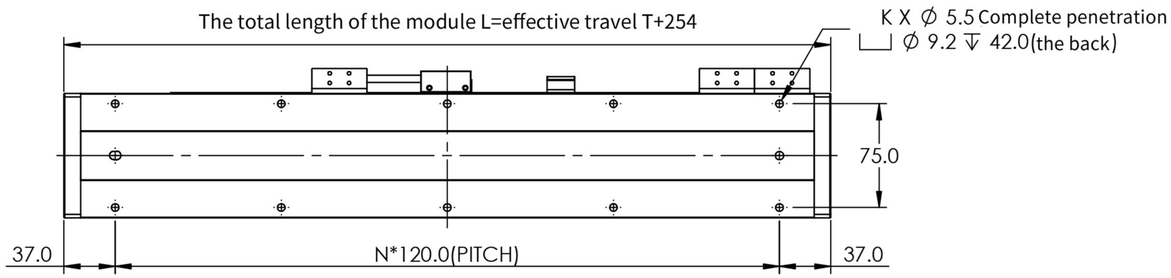

K: Module fixing Screw quantity
N: Pitch coefficient

Module’s bottom view

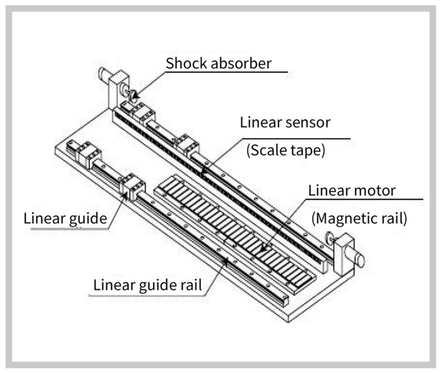

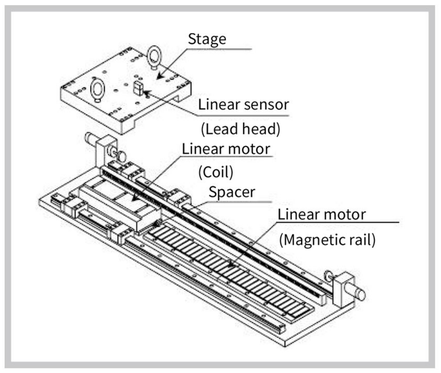

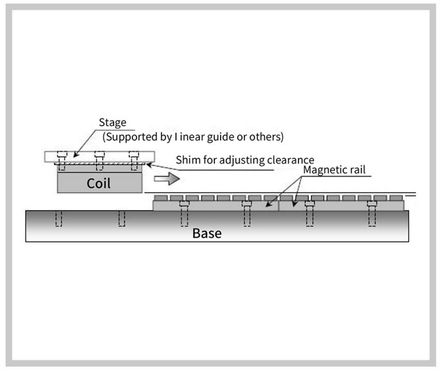

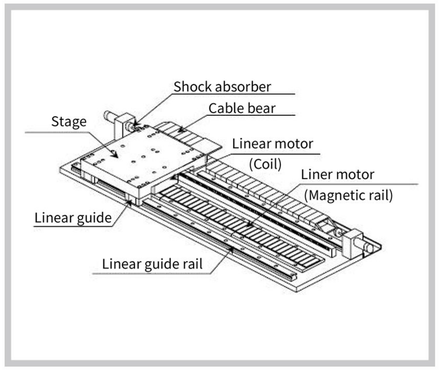

Quick Selection Reference J90 Module

J90-JXD096-038-020		
Trip(mm)	Maxium Speed	Completion Time
J90-JXD096-038-020-T60		
60	600mm/s	0.16s
J90-JXD096-038-020-T120		
120	700mm/s	0.241s
J90-JXD096-038-020-T180		
180	800mm/s	0.3.5s
J90-JXD096-038-020-T240		
240	900mm/s	0.357s
J90-JXD096-038-020-T300		
300	1000mm/s	0.4s
J90-JXD096-038-020-T360		
360	1100mm/s	0.437s
J90-JXD096-038-020-T420		
420	1150mm/s	0.48s
J90-JXD096-038-020-T480		
480	1200mm/s	0.52s
J90-JXD096-038-020-T540		
540	1250mm/s	0.557s
J90-JXD096-038-020-T600		
600	1300mm/s	0.592s
J90-JXD096-038-020-T660		
660	1400mm/s	0.611s
J90-JXD096-038-020-T720		
720	1450mm/s	0.642s
J90-JXD096-038-020-T780		
780	1500mm/s	0.67s
J90-JXD096-038-020-T840		
840	1550mm/s	0.697s
J90-JXD096-038-020-T900		
900	1550mm/s	0.736s
J90-JXD096-038-020-T960		
960	1600mm/s	0.76s
J90-JXD096-038-020-T1020		
1020	1650mm/s	0.783s
J90-JXD096-038-020-T1080		
1080	1700mm/s	0.805s
Continuous thrust 46N, load 5kg, acceleration 1G, dwell time 0.2s		

J90-JXD180-038-020		
Trip(mm)	Maxium Speed	Completion Time
J90-JXD180-038-020-T60		
60	750mm/s	0.155s
J90-JXD180-038-020-T120		
120	900mm/s	0.223s
J90-JXD180-038-020-T180		
180	1000mm/s	0.28s
J90-JXD180-038-020-T240		
240	1100mm/s	0.328s
J90-JXD180-038-020-T300		
300	1200mm/s	0.37s
J90-JXD180-038-020-T360		
360	1300mm/s	0.407s
J90-JXD180-038-020-T420		
420	1380mm/s	10.442s
J90-JXD180-038-020-T480		
480	1400mm/s	0.483s
J90-JXD180-038-020-T540		
540	1500mm/s	0.51s
J90-JXD180-038-020-T600		
600	1600mm/s	0.535s
J90-JXD180-038-020-T660		
660	1650mm/s	0.565s
J90-JXD180-038-020-T720		
720	1700mm/s	0.594s
J90-JXD180-038-020-T780		
780	1750mm/s	0.621s
J90-JXD180-038-020-T840		
840	1800mm/s	0.647s
J90-JXD180-038-020-T900		
900	1850mm/s	0.672s
J90-JXD180-038-020-T960		
960	1900mm/s	0.695s
J90-JXD180-038-020-T1020		
1020	1950mm/s	0.718s
J90-JXD180-038-020-T1080		
1080	2000mm/s	0.74s
Continuous thrust 86N, load 8kg, acceleration 1G, dwell time 0.2s		

J90-JXD266-038-020		
Trip(mm)	Maxium Speed	Completion Time
J90-JXD266-038-020-T80		
80	850mm/s	0.179s
J90-JXD266-038-020-T140		
140	1150mm/s	0.237s
J90-JXD266-038-020-T200		
200	1350mm/s	0.283s
J90-JXD266-038-020-T260		
260	1450mm/s	0.324s
J90-JXD266-038-020-T320		
320	1550mm/s	0.362s
J90-JXD266-038-020-T380		
380	1650mm/s	0.395s
J90-JXD266-038-020-T440		
440	1750mm/s	0.426s
J90-JXD266-038-020-T500		
500	1850mm/s	0.455s
J90-JXD266-038-020-T560		
560	1900mm/s	0.485s
J90-JXD266-038-020-T620		
620	2000mm/s	0.51s
J90-JXD266-038-020-T680		
680	2000mm/s	0.54s
J90-JXD266-038-020-T740		
740	2000mm/s	0.57s
J90-JXD266-038-020-T800		
800	2000mm/s	0.6s
J90-JXD266-038-020-T860		
860	2000mm/s	0.63s
J90-JXD266-038-020-T920		
920	2000mm/s	0.66s
J90-JXD266-038-020-T980		
980	2000mm/s	0.69s
J90-JXD266-038-020-T1040		
1040	2000mm/s	0.72s
J90-JXD266-038-020-T1100		
1100	2000mm/s	0.75s
Continuous thrust 118N, load 10kg, acceleration 1G, dwell time 0.2s		

Quick Selection Reference J110 module

J110-JXD180-053-035		
Trip(mm)	Maxium Speed	Completion Time
J110-JXD180-053-035-T60		
60	750mm/s	0.155s
J110-JXD180-053-035-T120		
120	1000mm/s	0.22s
J110-JXD180-053-035-T180		
180	1200mm/s	0.27s
J110-JXD180-053-035-T240		
240	1300mm/s	0.315s
J110-JXD180-053-035-T300		
300	1400mm/s	0.354s
J110-JXD180-053-035-T360		
360	1500mm/s	0.39s
J110-JXD180-053-035-T420		
420	1600mm/s	0.423s
J110-JXD180-053-035-T480		
480	1700mm/s	0.452s
J110-JXD180-053-035-T540		
540	1800mm/s	0.48s
J110-JXD180-053-035-T600		
600	1900mm/s	0.506s
J110-JXD180-053-035-T660		
660	2000mm/s	0.53s
J110-JXD180-053-035-T720		
720	2000mm/s	0.56s
J110-JXD180-053-035-T780		
780	2000mm/s	0.59s
J110-JXD180-053-035-T840		
840	2000mm/s	0.62s
J110-JXD180-053-035-T900		
900	2000mm/s	0.659s
J110-JXD180-053-035-T960		
960	2000mm/s	0.68s
J110-JXD180-053-035-T1020		
1020	2000mm/s	0.719s
J110-JXD180-053-035-T1080		
1080	2000mm/s	0.74s

Continuous thrust 145N, load 12kg, acceleration 1G, dwell time 0.2s

J110-JXD096-053-035		
Trip(mm)	Maxium Speed	Completion Time
J110-JXD096-053-035-T60		
60	550mm/s	0.164s
J110-JXD096-053-035-T120		
120	650mm/s	0.25s
J110-JXD096-053-035-T180		
180	750mm/s	0.315s
J110-JXD096-053-035-T240		
240	850mm/s	0367s
J110-JXD096-053-035-T300		
300	950mm/s	0.411s
J110-JXD096-053-035-T360		
360	1000mm/s	0.46s
J110-JXD096-053-035-T420		
420	1050mm/s	0.505s
J110-JXD096-053-035-T480		
480	1100mm/s	0.546s
J110-JXD096-053-035-T540		
540	1200mm/s	0.57s
J110-JXD096-053-035-T600		
600	1250mm/s	0.605s
J110-JXD096-053-035-T660		
660	1300mm/s	0.638s
J110-JXD096-053-035-T720		
720	1350mm/s	0.668s
J110-JXD096-053-035-T780		
780	1400mm/s	0.697s
J110-JXD096-053-035-T840		
840	1450mm/s	0.724s
J110-JXD096-053-035-T900		
900	1450mm/s	0.766s
J110-JXD096-053-035-T960		
960	1500mm/s	0.79s
J110-JXD096-053-035-T1020		
1020	1550mm/s	0.813s
J110-JXD096-053-035-T1080		
1080	1600mm/s	0.835s

Continuous thrust 73N, load 8kg, acceleration 1G, dwell time 0.2s

J110-JXD266-053-035		
Trip(mm)	Maxium Speed	Completion Time
J110-JXD266-053-035-T80		
80	850mm/s	0.179s
J110-JXD266-053-035-T140		
140	1100mm/s	0.237s
J110-JXD266-053-035-T200		
200	1400mm/s	0.283s
J110-JXD266-053-035-T260		
260	1500mm/s	0.323s
J110-JXD266-053-035-T320		
320	1600mm/s	0.36s
J110-JXD266-053-035-T380		
380	1700mm/s	0.394s
J110-JXD266-053-035-T440		
440	1800mm/s	0.424s
J110-JXD266-053-035-T500		
500	1900mm/s	0.453s
J110-JXD266-053-035-T560		
560	2000mm/s	0.48s
J110-JXD266-053-035-T620		
620	2000mm/s	0.51s
J110-JXD266-053-035-T680		
680	2000mm/s	0.54s
J110-JXD266-053-035-T740		
740	2000mm/s	0.57s
J110-JXD266-053-035-T800		
800	2000mm/s	0.6s
J110-JXD266-053-035-T860		
860	2000mm/s	0.63s
J110-JXD266-053-035-T920		
920	2000mm/s	0.66s
J110-JXD266-053-035-T980		
980	2000mm/s	0.69s
J110-JXD266-053-035-T1040		
1040	2000mm/s	0.72s
J110-JXD266-053-035-T1100		
1100	2000mm/s	0.75s

Continuous thrust 202N, load 15kg, acceleration 1G, dwell time 0.2s

Quick Selection Reference 145 module

J145-JXD096-060		
Trip(mm)	Maxium Speed	Completion Time
J145-JXD096-060-T60		
60	400mm/s	0.19s
J145-JXD096-060-T120		
120	500mm/s	0.29s
J145-JXD096-060-T180		
180	600mm/s	0.36s
J145-JXD096-060-T240		
240	650mm/s	0.434s
J145-JXD096-060-T300		
300	700mm/s	0.499s
J145-JXD096-060-T360		
360	750mm/s	0.555s
J145-JXD096-060-T420		
420	800mm/s	0.605s
J145-JXD096-060-T480		
480	850mm/s	0.65s
J145-JXD096-060-T540		
540	900mm/s	0.69s
J145-JXD096-060-T600		
600	950mm/s	0.727s
J145-JXD096-060-T660		
660	1000mm/s	0.76s
J145-JXD096-060-T720		
720	1050mm/s	0.791s
J145-JXD096-060-T780		
780	1100mm/s	0.819s
J145-JXD096-060-T840		
840	1100mm/s	0.874s
J145-JXD096-060-T900		
900	1150mm/s	0.898s
J145-JXD096-060-T960		
960	1200mm/s	0.92s
J145-JXD096-060-T1020		
1020	1200mm/s	0.97s
J145-JXD096-060-T1080		
1080	1250mm/s	0.989s

Continuous thrust 73N, load 10kg, acceleration 1G, dwell time 0.2s

J145-JXD180-060		
Trip(mm)	Maxium Speed	Completion Time
J145-JXD180-060-T60		
60	650mm/s	0.157s
J145-JXD180-060-T120		
120	800mm/s	0.23s
J145-JXD180-060-T180		
180	900mm/s	0.29s
J145-JXD180-060-T240		
240	1000mm/s	0.34s
J145-JXD180-060-T300		
300	1100mm/s	0.383s
J145-JXD180-060-T360		
360	1100mm/s	0.437s
J145-JXD180-060-T420		
420	1200mm/s	0.47s
J145-JXD180-060-T480		
480	1300mm/s	0.499s
J145-JXD180-060-T540		
540	1350mm/s	0.535s
J145-JXD180-060-T600		
600	1400mm/s	0.569s
J145-JXD180-060-T660		
660	1500mm/s	0.59s
J145-JXD180-060-T720		
720	1550mm/s	0.62s
J145-JXD180-060-T780		
780	1600mm/s	0.648s
J145-JXD180-060-T840		
840	1650mm/s	0.0.674s
J145-JXD180-060-T900		
900	1700mm/s	0.699s
J145-JXD180-060-T960		
960	1750mm/s	0.724s
J145-JXD180-060-T1020		
1020	1800mm/s	0.747s
J145-JXD180-060-T1080		
1080	1850mm/s	0.769s

Continuous thrust 145N, load 15kg, acceleration 1G, dwell time 0.2s

J145-JXD266-060		
Trip(mm)	Maxium Speed	Completion Time
J145-JXD266-060-T80		
80	750mm/s	0.182s
J145-JXD266-060-T140		
140	900mm/s	0.246s
J145-JXD266-060-T200		
200	1000mm/s	0.2s
J145-JXD266-060-T260		
260	1100mm/s	0.346s
J145-JXD266-060-T320		
320	1200mm/s	0.387s
J145-JXD266-060-T380		
380	1300mm/s	0.422s
J145-JXD266-060-T440		
440	1350mm/s	0.461s
J145-JXD266-060-T500		
500	1400mm/s	0.497s
J145-JXD266-060-T560		
560	1500mm/s	0.523s
J145-JXD266-060-T620		
620	1550mm/s	0.555s
J145-JXD266-060-T680		
680	1600mm/s	0.585s
J145-JXD266-060-T740		
740	1650mm/s	0.614s
J145-JXD266-060-T800		
800	1700mm/s	0.641s
J145-JXD266-060-T860		
860	1750mm/s	0.666s
J145-JXD266-060-T920		
920	1800mm/s	0.691s
J145-JXD266-060-T980		
980	1850mm/s	0.715s
J145-JXD266-060-T1040		
1040	1900mm/s	0.737s
J145-JXD266-060-T1100		
1100	1950mm/s	0.759s

Continuous thrust 202N, load 20kg, acceleration 1G, dwell time 0.2s

Quick Selection ReferenceJ170 module

J170-JXD096-080		
Trip(mm)	Maxium Speed	Completion Time
J170-JXD096-080-T60		
60	400mm/s	0.19s
J170-JXD096-080-T120		
120	500mm/s	0.29s
J170-JXD096-080-T180		
180	550mm/s	0.382s
J170-JXD096-080-T240		
240	650mm/s	0.434s
J170-JXD096-080-T300		
300	700mm/s	0.499s
J170-JXD096-080-T360		
360	750mm/s	0.555s
J170-JXD096-080-T420		
420	800mm/s	0.605s
J170-JXD096-080-T480		
480	850mm/s	0.65s
J170-JXD096-080-T540		
540	900mm/s	0.69s
J170-JXD096-080-T600		
600	950mm/s	0.727s
J170-JXD096-080-T660		
660	1000mm	0.76s
J170-JXD096-080-T720		
720	1000mm/s	0.82s
J170-JXD096-080-T780		
780	1050mm/s	0.848s
J170-JXD096-080-T840		
840	1100mm/s	0.874s
J170-JXD096-080-T900		
900	1100mm/s	0.928s
J170-JXD096-080-T960		
960	1150mm/s	0.95s
J170-JXD096-080-T1020		
1020	1200mm/s	0.97s
J170-JXD096-080-T1080		
1080	1200mm/s	1.02s
Continuous thrust 107N, load 15kg, acceleration 1G, dwell time 0.2s		

J170-JXD266-080		
Trip(mm)	Maxium Speed	Completion Time
J170-JXD266-080-T80		
80	600mm/s	0.253s
J170-JXD266-080-T140		
140	800mm/s	0.335s
J170-JXD266-080-T200		
200	1000mm/s	0.4s
J170-JXD266-080-T260		
260	1100mm/s	0.456s
J170-JXD266-080-T320		
320	1200mm/s	0.507s
J170-JXD266-080-T380		
380	1300mm/s	0.552s
J170-JXD266-080-T440		
440	1400mm/s	0.594s
J170-JXD266-080-T500		
500	1500mm/s	0.633s
J170-JXD266-080-T560		
560	1600mm/s	0.67s
J170-JXD266-080-T620		
620	1700mm/s	0.705s
J170-JXD266-080-T680		
680	1800mm/s	0.738s
J170-JXD266-080-T740		
740	1900mm/s	0.77s
J170-JXD266-080-T800		
800	2000mm/s	0.8s
J170-JXD266-080-T860		
860	2000mm/s	0.83s
J170-JXD266-080-T920		
920	2000mm/s	0.86s
J170-JXD266-080-T980		
980	2000mm/s	0.89s
J170-JXD266-080-T1040		
1040	2000mm/s	0.92s
J170-JXD266-080-T1100		
1100	2000mm/s	0.95s
Continuous thrust 316N, load 30kg, acceleration 1G, dwell time 0.2s		

J170-JXD180-080		
Trip(mm)	Maxium Speed	Completion Time
J170-JXD180-080-T60		
60	750mm/s	0.155s
J170-JXD180-080-T120		
120	900mm/s	0.223s
J170-JXD180-080-T180		
180	1100mm/s	0.274s
J170-JXD180-080-T240		
240	1200mm/s	0.32s
J170-JXD180-080-T300		
300	1300mm/s	0.361s
J170-JXD180-080-T360		
360	1350mm/s	0.402s
J170-JXD180-080-T420		
420	1450mm/s	0.435s
J170-JXD180-080-T480		
480	1500mm/s	0.47s
J170-JXD180-080-T540		
540	1600mm/s	0.498s
J170-JXD180-080-T600		
600	1650mm/s	0.529s
J170-JXD180-080-T660		
660	1700mm/s	0.558s
J170-JXD180-080-T720		
720	1800mm/s	0.58s
J170-JXD180-080-T780		
780	1850mm/s	0.607s
J170-JXD180-080-T840		
840	1900mm/s	0.632s
J170-JXD180-080-T900		
900	1950mm/s	0.657s
J170-JXD180-080-T960		
960	2000mm/s	0.68s
J170-JXD180-080-T1020		
1020	2000mm/s	0.71s
J170-JXD180-080-T1080		
1080	2000mm/s	0.74s
Continuous thrust 213N, load 20kg, acceleration 1G, dwell time 0.2s		

Quick Selection Reference J210 module

J210-JXD096-100		
Trip(mm)	Maxium Speed	Completion Time
J210-JXD096-100-T60		
60	350mm/s	0.206s
J210-JXD096-100-T120		
120	450mm/s	0.206s
J210-JXD096-100-T180		
180	550mm/s	0.206s
J210-JXD096-100-T240		
240	600mm/s	0.206s
J210-JXD096-100-T300		
300	700mm/s	0.206s
J210-JXD096-100-T360		
360	750mm/s	0.206s
J210-JXD096-100-T420		
420	800mm/s	0.206s
J210-JXD096-100-T480		
480	850mm/s	0.206s
J210-JXD096-100-T540		
540	850mm/s	0.206s
J210-JXD096-100-T600		
600	900mm/s	0.206s
J210-JXD096-100-T660		
660	950mm/s	0.206s
J210-JXD096-100-T720		
720	1000mm/s	0.206s
J210-JXD096-100-T780		
780	1050mm/s	0.206s
J210-JXD096-100-T840		
840	1050mm/s	0.206s
J210-JXD096-100-T900		
900	1100mm/s	0.206s
J210-JXD096-100-T960		
960	1150mm/s	0.206s
J210-JXD096-100-T1020		
1020	1150mm/s	0.206s
J210-JXD096-100-T1080		
1080	1200mm/s	0.206s
Continuous thrust 134N, load 20kg, acceleration 1G, dwell time 0.2s		

J210-JXD180-100		
Trip(mm)	Maxium Speed	Completion Time
J210-JXD180-100-T60		
60	500mm/s	0.22s
J210-JXD180-100-T120		
120	750mm/s	0.31s
J210-JXD180-100-T180		
180	900mm/s	0.38s
J210-JXD180-100-T240		
240	1000mm/s	0.44s
J210-JXD180-100-T300		
300	1200mm/s	0.49s
J210-JXD180-100-T360		
360	1300mm/s	0.537s
J210-JXD180-100-T420		
420	1400mm/s	0.58s
J210-JXD180-100-T480		
480	1500mm/s	0.62s
J210-JXD180-100-T540		
540	1500mm/s	0.66s
J210-JXD180-100-T600		
600	1500mm/s	0.7s
J210-JXD180-100-T660		
660	1500mm/s	0.74s
J210-JXD180-100-T720		
720	1500mm/s	0.78s
J210-JXD180-100-T780		
780	1500mm/s	0.82s
J210-JXD180-100-T840		
840	1500mm/s	0.86s
J210-JXD180-100-T900		
900	1500mm/s	0.9s
J210-JXD180-100-T960		
960	1500mm/s	0.94s
J210-JXD180-100-T1020		
1020	1500mm/s	0.98s
J210-JXD180-100-T1080		
1080	1500mm/s	1.02s
Continuous thrust 267N, load 35kg, acceleration 1G, dwell time 0.2s		

J210-JXD266-100		
Trip(mm)	Maxium Speed	Completion Time
J210-JXD266-100-T80		
80	600mm/s	0.253s
J210-JXD266-100-T140		
140	800mm/s	0.335s
J210-JXD266-100-T200		
200	1000mm/s	0.4s
J210-JXD266-100-T260		
260	1000mm/s	0.46s
J210-JXD266-100-T320		
320	1000mm/s	0.52s
J210-JXD266-100-T380		
380	1000mm/s	0.58s
J210-JXD266-100-T440		
440	1000mm/s	0.64s
J210-JXD266-100-T500		
500	1000mm/s	0.7s
J210-JXD266-100-T560		
560	1000mm/s	0.76s
J210-JXD266-100-T620		
620	1000mm/s	0.82s
J210-JXD266-100-T680		
680	1000mm/s	0.88s
J210-JXD266-100-T740		
740	1000mm/s	0.94s
J210-JXD266-100-T800		
800	1000mm/s	1s
J210-JXD266-100-T860		
860	1000mm/s	1.06s
J210-JXD266-100-T920		
920	1000mm/s	1.12s
J210-JXD266-100-T980		
980	1000mm/s	1.18s
J210-JXD266-100-T1040		
1040	1000mm/s	1.24s
J210-JXD266-100-T1100		
1100	1000mm/s	1.3s
Continuous thrust 400N, load 50kg, acceleration 1G, dwell time 0.2s		

Naming rule

Naming rule 1:

J90-JXD096-038-020-TXXX

① ② ③ ④

① J90:
Module width size(mm)

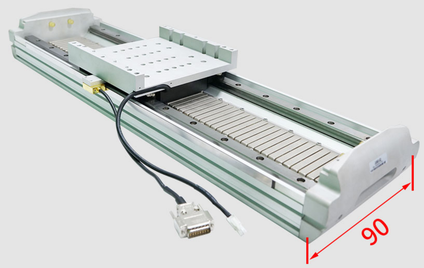

② JXD096:
Mover's length(mm)
The standard high is 40mm

③ 038-020:
Mover's shape width(mm)
038 is the bottom size;
020 is the upper size;

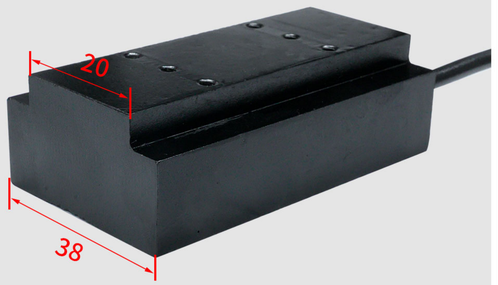

④ TXXX:
XXX represant number;
Means effective Length(mm)

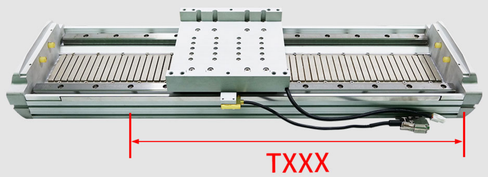

Naming rule 2:

J145-JXD096-060-TXXX

① ② ③ ④

① J145:
Module width Size(mm)

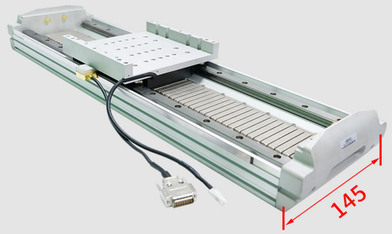

② JXD096:
Mover's length(mm)
The standard high is 40mm

③ 060:
Mover's width(mm)

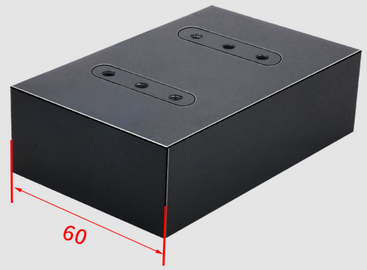

④ TXXX:
XXX represant number;
Means effective Length(mm)

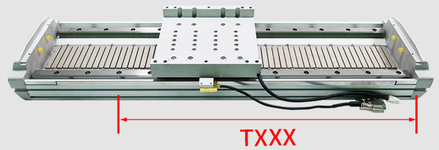

Naming opponent

J145-JXD096-060-TXXX-C010-7.0

Encoder	
C010:	Magnetic barrier 1um
C005:	Magnetic barrier 0.5um
G010:	Grating 1um
G005:	Grating 0.5um
G001:	Grating 0.1um

cable
3.0m
5.0m
10.0m

J90-JXD096-038-020-TXXX

Mover dimensions

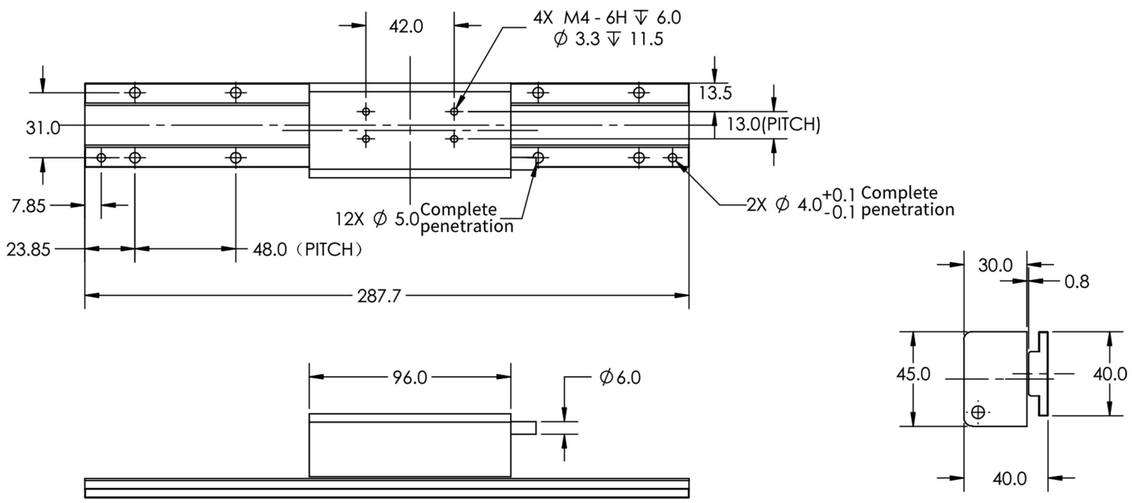

Maximum load 8KG
(At 300mm trip and 500m/s)

Mover parameters

Performance	Unit	Value
Peak Force	N	151
Continuous Force	N	46
Coil Weight	Kg	0.60
Electrical Cycle Length	mm	24
Peak Current	Arms	10.0
Continuous Current	Arms	3.0
Resistance Phase to Phase @25°	ohms	1.6
Inductance Phase to Phase	mH	8

Module dimensions

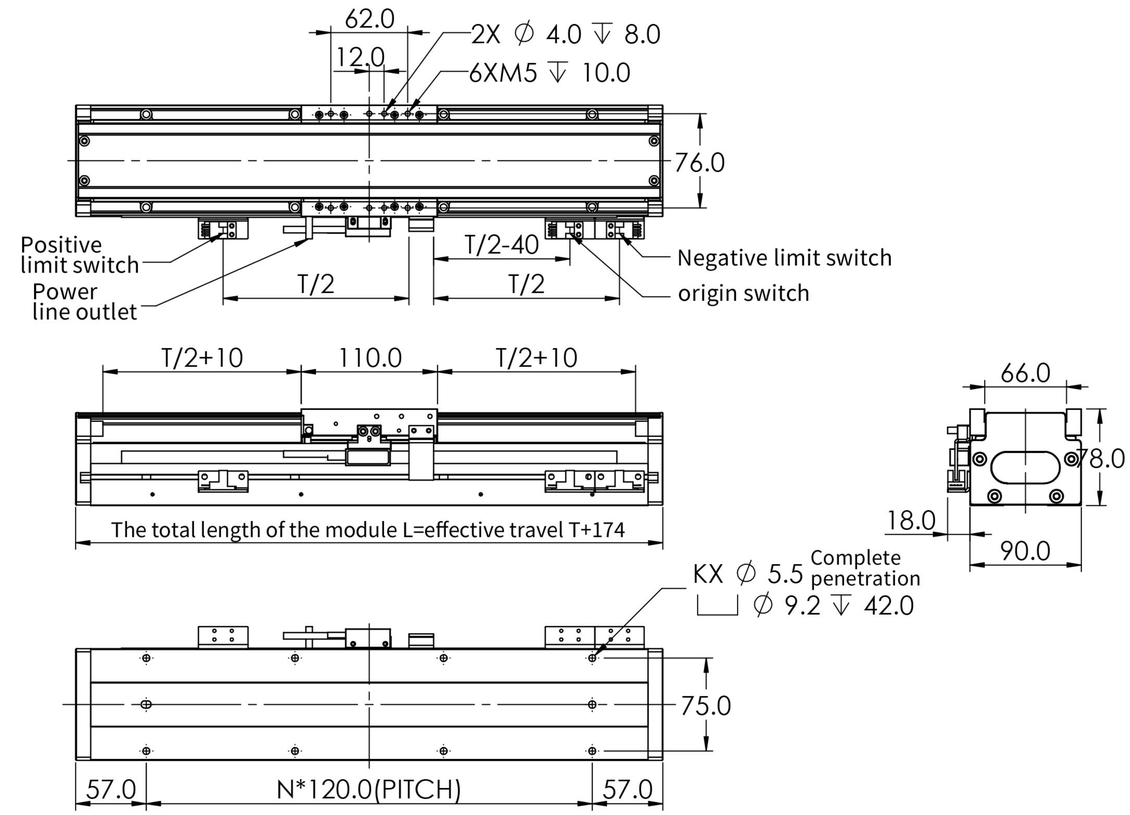

Module Parameters

trip (mm) / parameter	60	120	180	240	300	360	420	480	540	600	660	720	780	840	900	960	1020	1080
K	4	6	6	8	8	10	10	12	12	14	14	16	16	18	18	20	20	22
N	1	2	2	3	3	4	4	5	5	6	6	7	7	8	8	9	9	10
L(mm)	234	294	354	414	474	534	594	654	714	774	834	894	954	1014	1074	1134	1194	1254
kg	3.37	3.97	4.57	5.17	5.77	6.37	6.97	7.57	8.17	8.77	9.37	9.97	10.57	11.17	11.77	12.37	12.97	13.57

J90-JXD180-038-020-TXXX

Mover dimensions

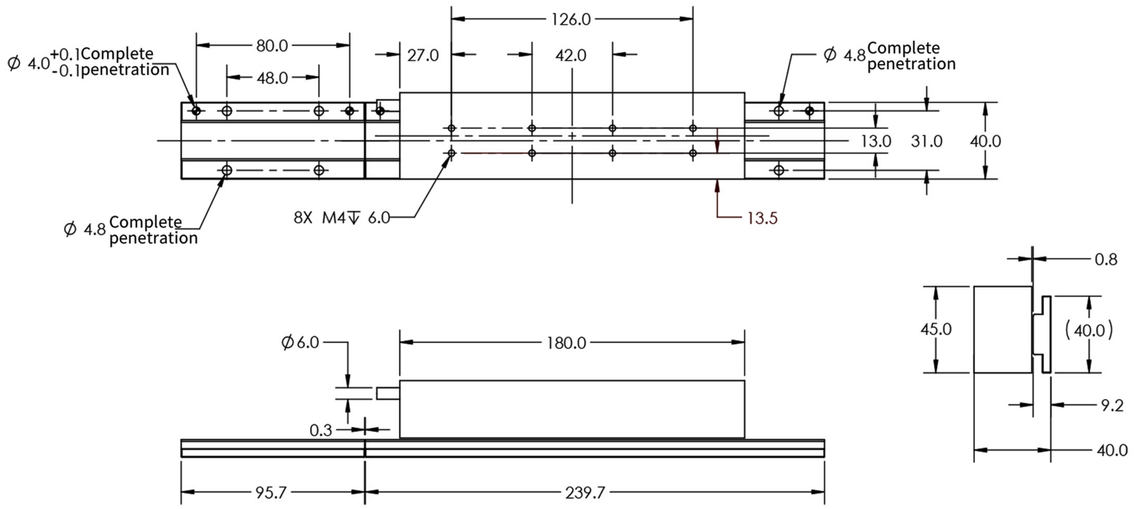

Maximum load:16kg
(At 300mm trip and 500m/s)

Mover parameters

Performance	Unit	Value
Peak Force	N	305
Continuous Force	N	86
Coil Weight	Kg	1.00
Electrical Cycle Length	mm	24
Peak Current	Arms	10.0
Continuous Current	Arms	2.8
Resistance Phase to Phase @25°	ohms	3.2
Inductance Phase to Phase	mH	16

Module dimensions

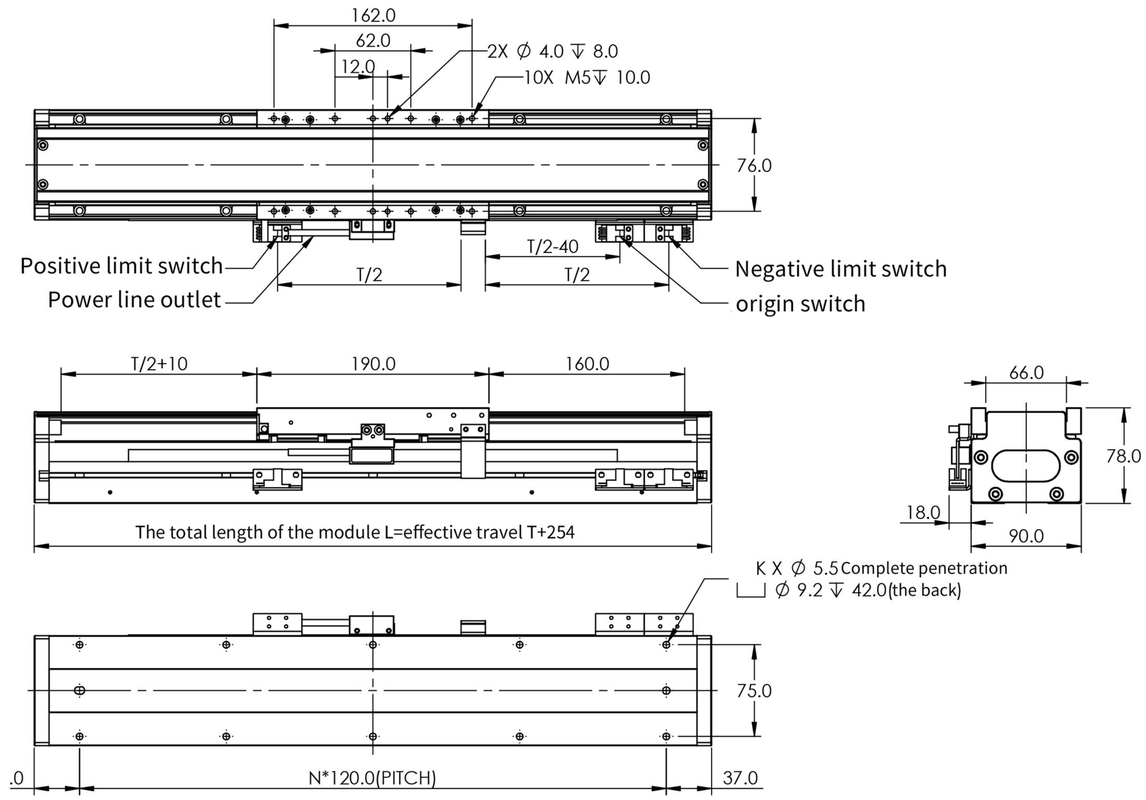

Module Parameters

trip (mm) / parameter	60	120	180	240	300	360	420	480	540	600	660	720	780	840	900	960	1020	1080
K	6	6	8	8	10	10	12	12	14	14	16	16	18	18	20	20	22	22
N	2	2	3	3	4	4	5	5	6	6	7	7	8	8	9	9	10	10
L(mm)	314	374	434	494	554	614	674	734	794	854	914	974	1034	1034	1154	1214	1274	1334
kg	4.89	5.49	4.69	6.69	7.29	7.89	8.49	9.09	9.69	10.29	10.89	11.49	12.09	12.69	14.29	13.89	14.49	15.09

J90-JXD266-038-020-TXXX

Mover dimensions

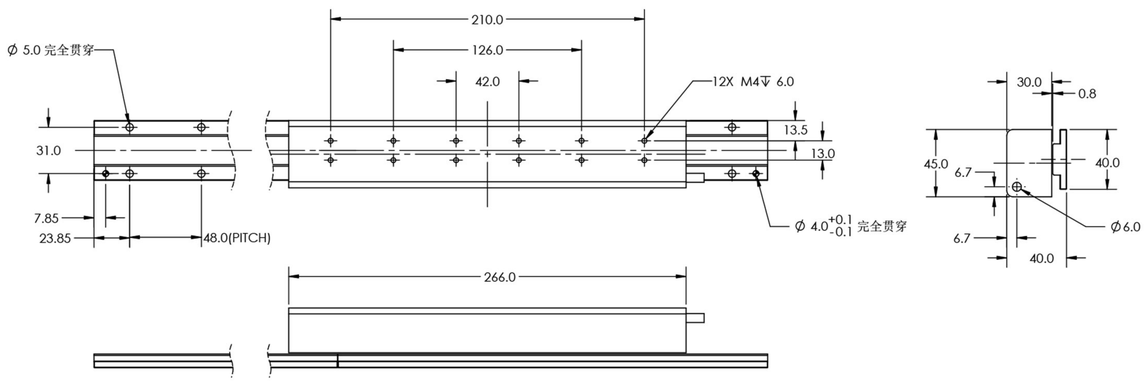

Maximum load: 22KG
(At 300mm trip and 500m/s)

Mover parameters

Performance	Unit	Value
Peak Force	N	422.0
Continuous Force	N	118.0
Coil Weight	Kg	1.6
Electrical Cycle Length	mm	24
Peak Current	Arms	10.0
Continuous Current	Arms	2.8
Resistance Phase to Phase @25°	ohms	4.3
Inductance Phase to Phase	mH	28.0

Module dimensions

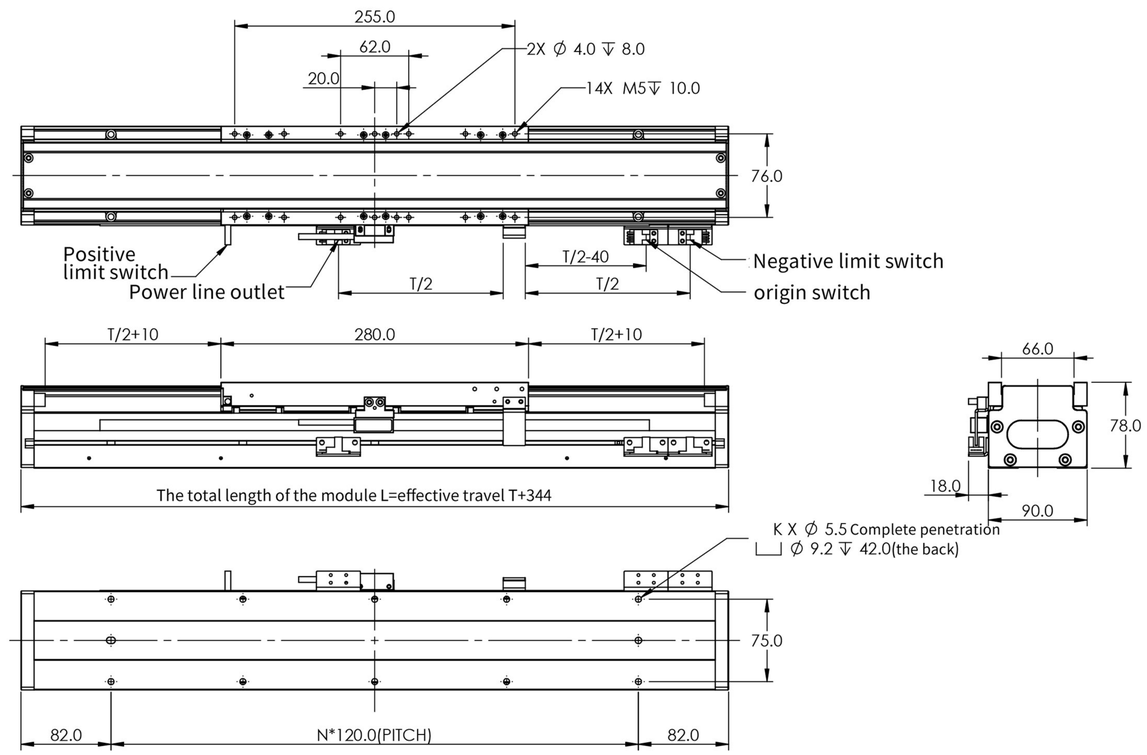

Module Parameters

trip (mm) / parameter	60	120	180	240	300	360	420	480	540	600	660	720	780	840	900	960	1020
K	6	8	8	10	10	12	12	14	14	16	16	18	18	20	20	22	22
N	2	3	3	4	4	5	5	6	6	7	7	8	8	9	9	10	10
L(mm)	404	464	524	584	644	704	764	824	884	944	1004	1064	1124	1184	1244	1304	1364
kg	6.89	7.49	8.09	8.69	9.29	9.89	10.49	11.09	11.69	12.29	12.89	13.49	14.09	14.69	15.29	15.89	16.49

J110-JXD096-053-035-TXXX

Mover dimensions

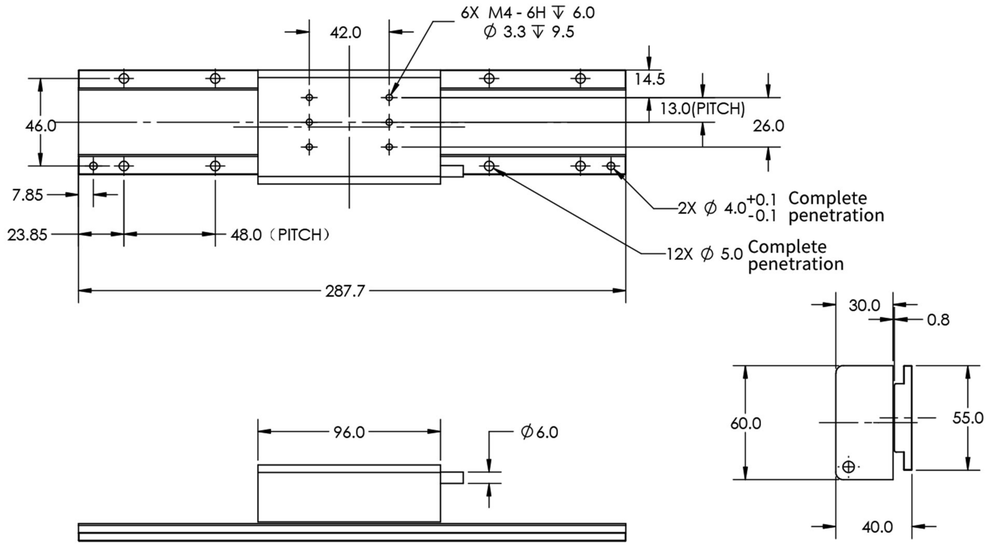

Maximum load : 14KG
(At 300mm trip and 500m/s)

Mover parameters

Performance	Unit	272 73
Peak Force	N	0.85
Continuous Force	N	24
Coil Weight	Kg	10.0
Electrical Cycle Length	mm	2.8
Peak Current	Arms	2.4
Continuous Current	Arms	10
Resistance Phase to Phase @25°	ohms	
Inductance Phase to Phase	mH	

Module dimensions

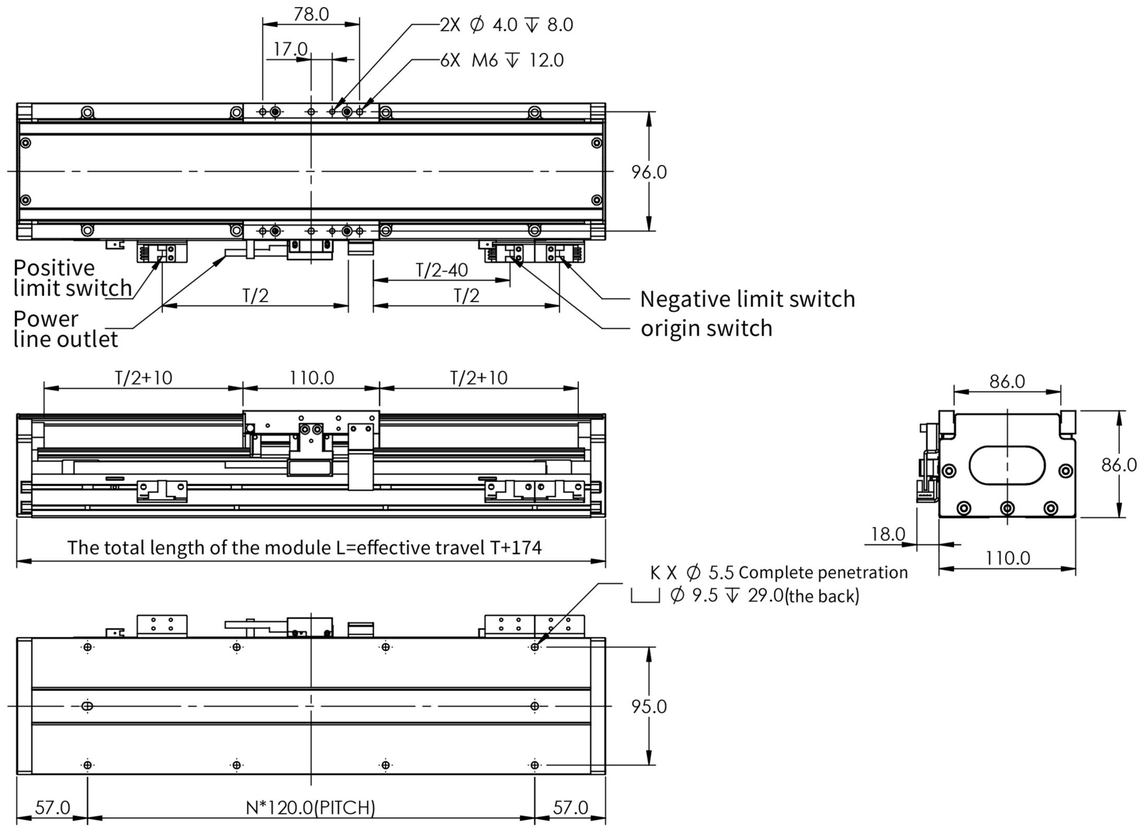

Module Parameters

trip (mm) / parameter	60	120	180	240	300	360	420	480	540	600	660	720	780	840	900	960	1020	1080
K	4	6	6	8	8	10	10	12	12	14	14	16	16	18	18	20	20	22
N	1	2	2	3	3	4	4	5	5	6	6	7	7	8	8	9	9	10
L(mm)	234	294	354	414	474	534	594	654	714	774	834	894	954	1014	1074	1134	1194	1254
kg	4.64	5.48	6.32	7.16	8	8.84	9.68	10.52	11.36	12.2	13.04	13.88	14.72	15.56	16.4	17.24	18.08	18.92

J110-JXD180-053-035-TXXX

Mover dimensions

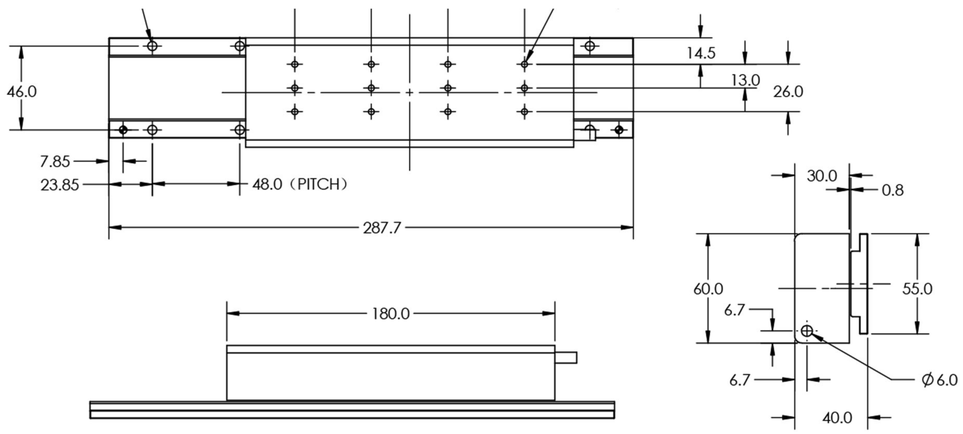

Maximum load : 28KG
(At 300mm trip and 500m/s)

Mover parameters

Performance	Unit	Value
Peak Force	N	536
Continuous Force	N	145
Coil Weight	Kg	1.50
Electrical Cycle Length	mm	24
Peak Current	Arms	10.0
Continuous Current	Arms	2.8
Resistance Phase to Phase @25°	ohms	5.2
Inductance Phase to Phase	mH	19

Module dimensions

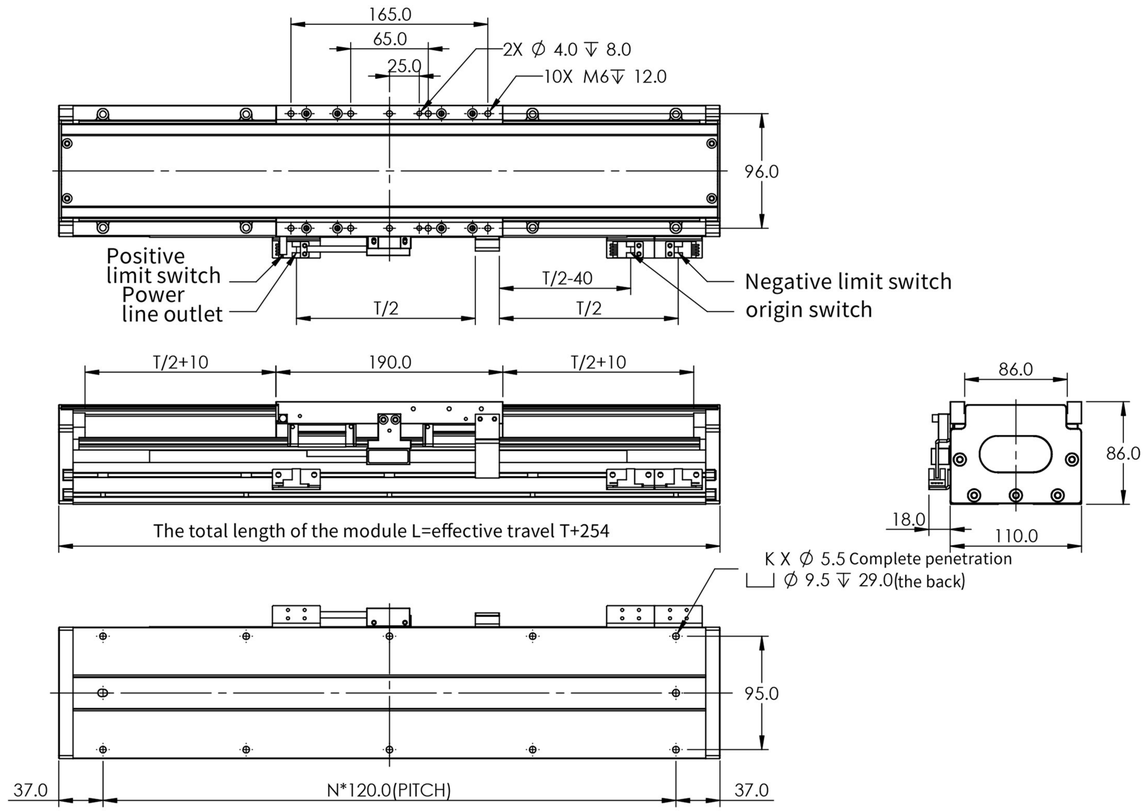

Module Parameters

trip (mm) / parameter	60	120	180	240	300	360	420	480	540	600	660	720	780	840	900	960	1020	1080
K	6	6	8	8	10	10	12	12	14	14	16	16	18	18	20	20	22	22
N	2	2	3	3	4	4	5	5	6	6	7	7	8	8	9	9	10	10
L(mm)	314	374	434	494	554	614	674	734	794	854	914	974	1034	1034	1154	1214	1274	1334
kg	6.94	7.78	8.62	9.46	10.3	11.14	11.98	12.82	13.66	14.5	15.34	16.18	17.02	17.86	18.7	19.54	20.38	21.22

J110-JXD266-053-035-TXXX

Mover dimensions

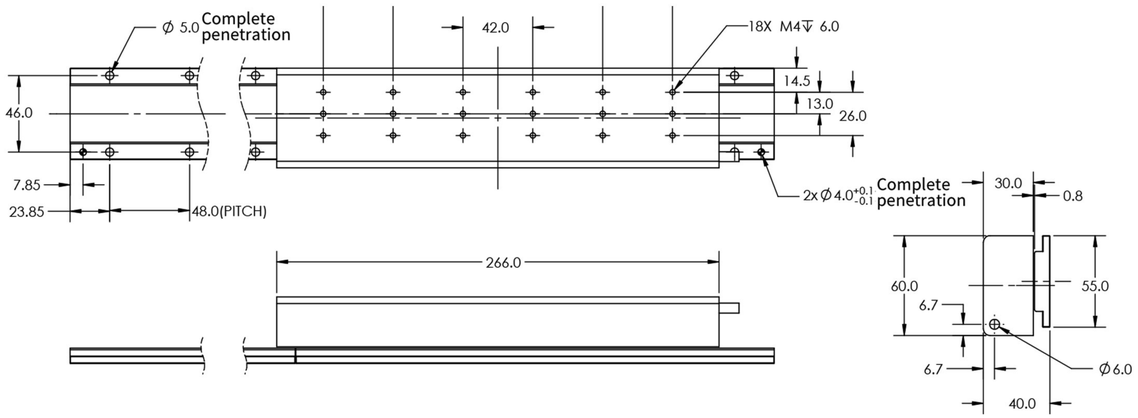

Maximum load : 40KG
(At 300mm trip and 500m/s)

Mover parameters

Performance	Unit	Value
Peak Force	N	722.0
Continuous Force	N	202.0
Coil Weight	Kg	2.4
Electrical Cycle Length	mm	24
Peak Current	Arms	10.0
Continuous Current	Arms	2.8
Resistance Phase to Phase @25°	ohms	6.5
Inductance Phase to Phase	mH	34.0

Module dimensions

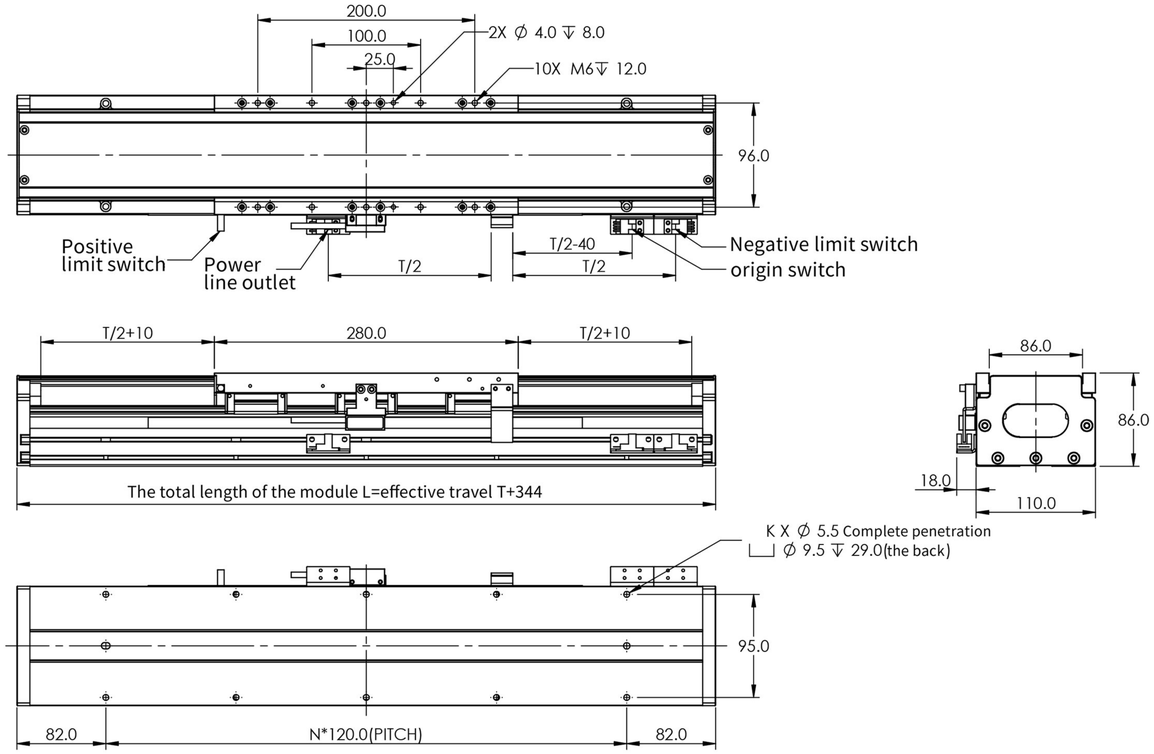

Module Parameters

trip (mm) / parameter	60	120	180	240	300	360	420	480	540	600	660	720	780	840	900	960	1020
K	6	8	8	10	10	12	12	14	14	16	16	18	18	20	20	22	22
N	2	3	3	4	4	5	5	6	6	7	7	8	8	9	9	10	10
L(mm)	404	464	524	584	644	704	764	824	884	944	1004	1064	1124	1184	1244	1304	1364
kg	9.85	10.69	11.53	12.37	13.21	14.05	14.89	15.73	16.57	17.41	18.25	19.09	19.93	20.77	21.61	22.45	23.29

J145-JXD096-060-TXXX

Mover dimensions

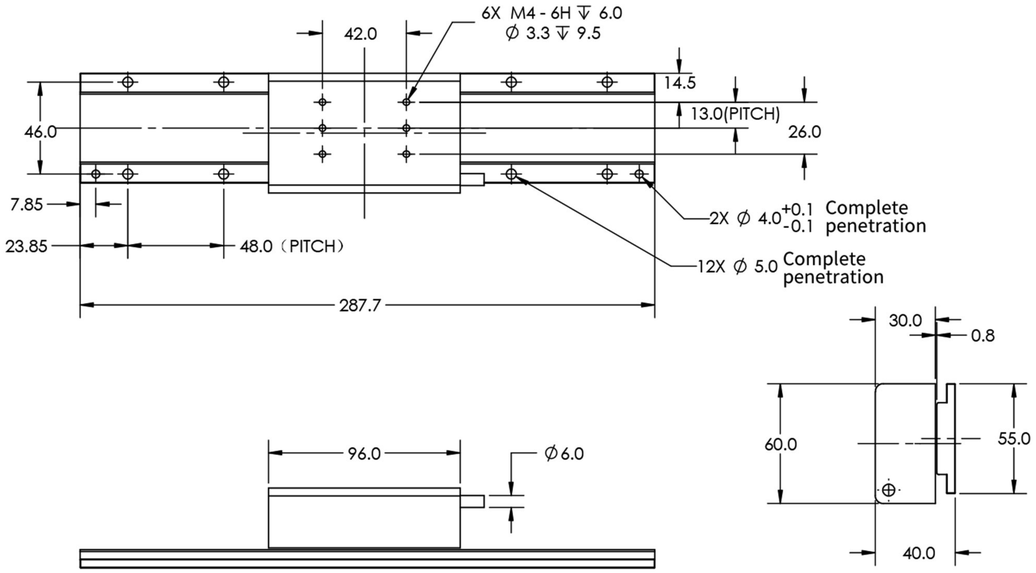

Maximum load : 14KG
(At 300mm trip and 500m/s)

Mover parameters

Performance	Unit	Value
Peak Force	N	272
Continuous Force	N	73
Coil Weight	Kg	0.85
Electrical Cycle Length	mm	24
Peak Current	Arms	10.0
Continuous Current	Arms	2.8
Resistance Phase to Phase @25°	ohms	2.4
Inductance Phase to Phase	mH	10

Module dimensions

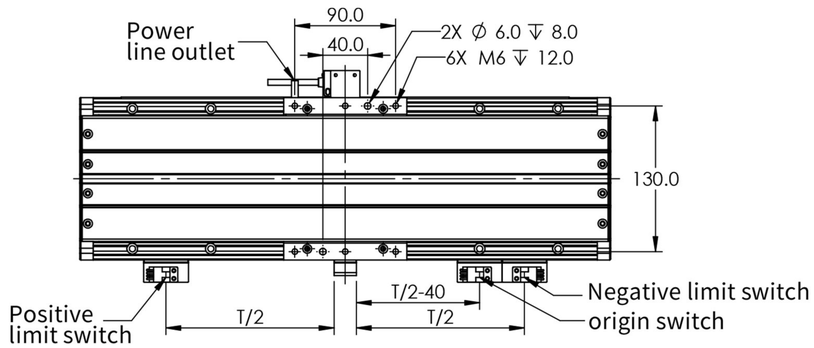

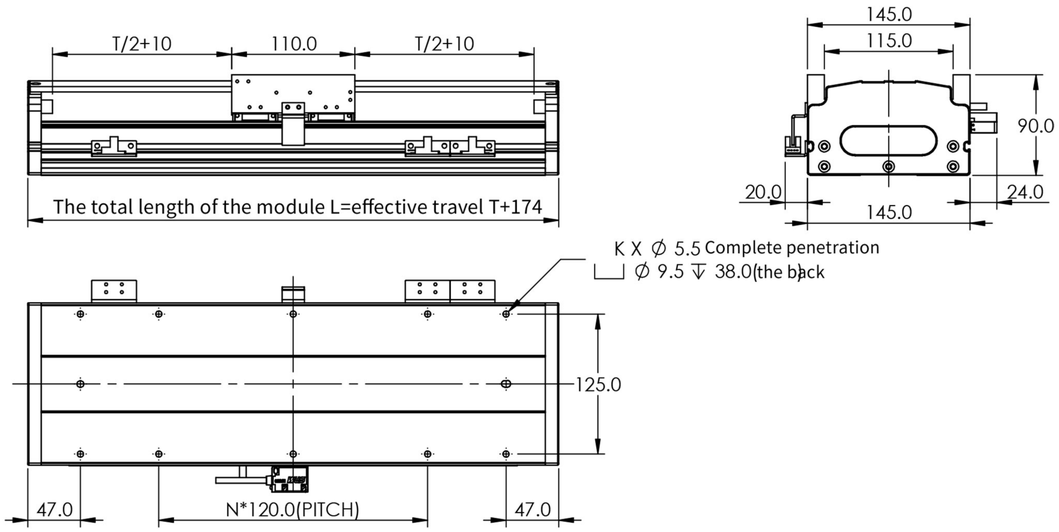

Module Parameters

trip (mm) / parameter	60	120	180	240	300	360	420	480	540	600	660	720	780	840	900	960	1020	1080
K	6	6	6	10	10	10	10	14	14	14	14	18	18	18	18	22	22	22
N	0	0	0	2	2	2	2	4	4	4	4	6	6	6	6	8	8	8
L(mm)	234	294	354	414	474	534	594	654	714	774	834	894	954	1014	1074	1134	1194	1254
kg	5.4	6.4	7.4	8.4	9.4	10.4	11.4	12.4	13.4	14.4	15.4	16.4	17.4	18.4	19.4	20.4	21.4	22.4

J145-JXD180-060-TXXX

Mover dimensions

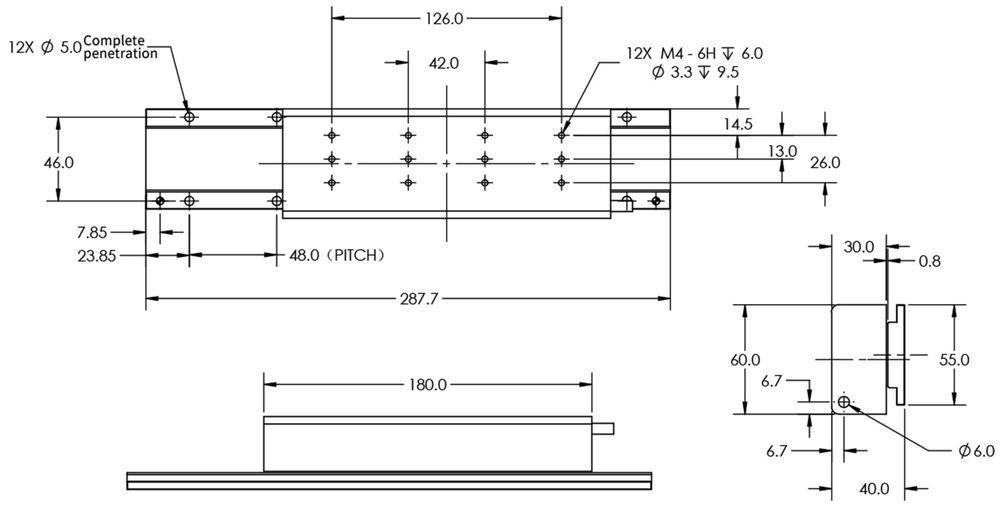

Maximum load : 28KG
(At 300mm trip and 500m/s)

Mover parameters

Performance	Unit	Value
Peak Force	N	536
Continuous Force	N	145
Coil Weight	Kg	1.50
Electrical Cycle Length	mm	24
Peak Current	Arms	10.0
Continuous Current	Arms	2.8
Resistance Phase to Phase @25°	ohms	5.2
Inductance Phase to Phase	mH	19

Module dimensions

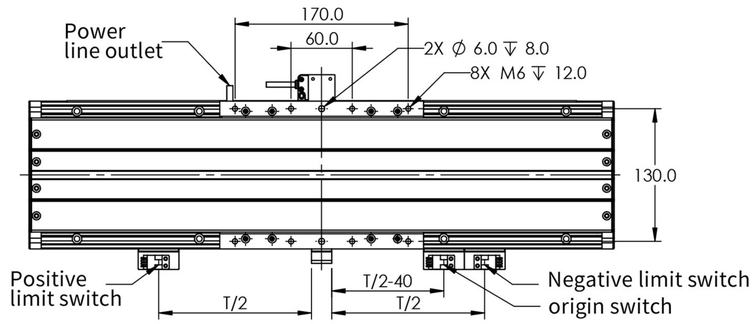

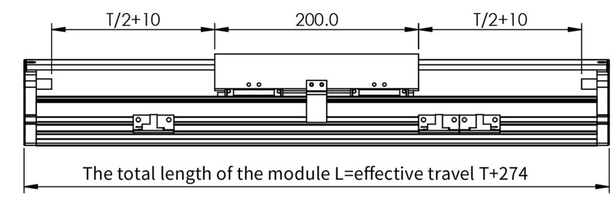

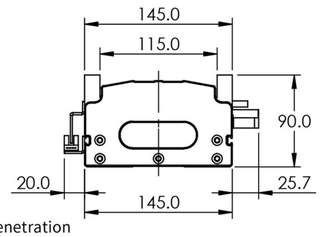

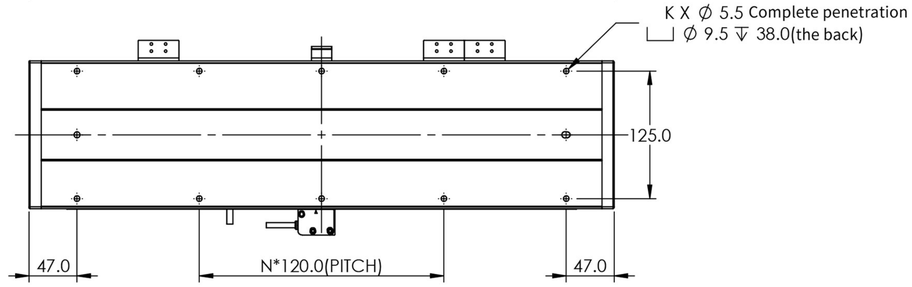

Module Parameters

trip (mm) / parameter	60	120	180	240	300	360	420	480	540	600	660	720	780	840	900	960	1020	1080
K	6	10	10	10	10	14	14	14	14	18	18	18	18	22	22	22	22	26
N	0	2	2	2	2	4	4	4	4	6	6	6	6	8	8	8	8	10
L(mm)	334	394	454	514	574	634	694	754	814	874	934	994	1054	1114	1174	1234	1294	1354
kg	8.4	9.4	10.4	11.4	12.4	13.4	14.4	15.4	16.4	17.4	18.4	19.4	20.4	21.4	22.4	23.4	24.4	25.4

J145-JXD266-060-TXXX

Mover dimensions

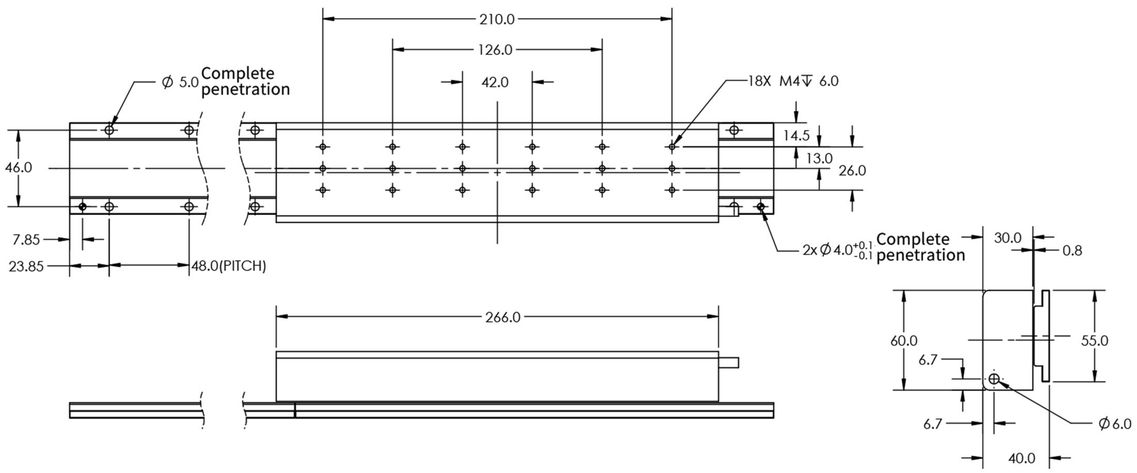

Maximum load : 40KG
(At 300mm trip and 500m/s)

Mover parameters

Performance	Unit	Value
Peak Force	N	722.0
Continuous Force	N	202.0
Coil Weight	Kg	2.4
Electrical Cycle Length	mm	24
Peak Current	Arms	10.0
Continuous Current	Arms	2.8
Resistance Phase to Phase @25°	ohms	6.5
Inductance Phase to Phase	mH	34.0

Module dimensions

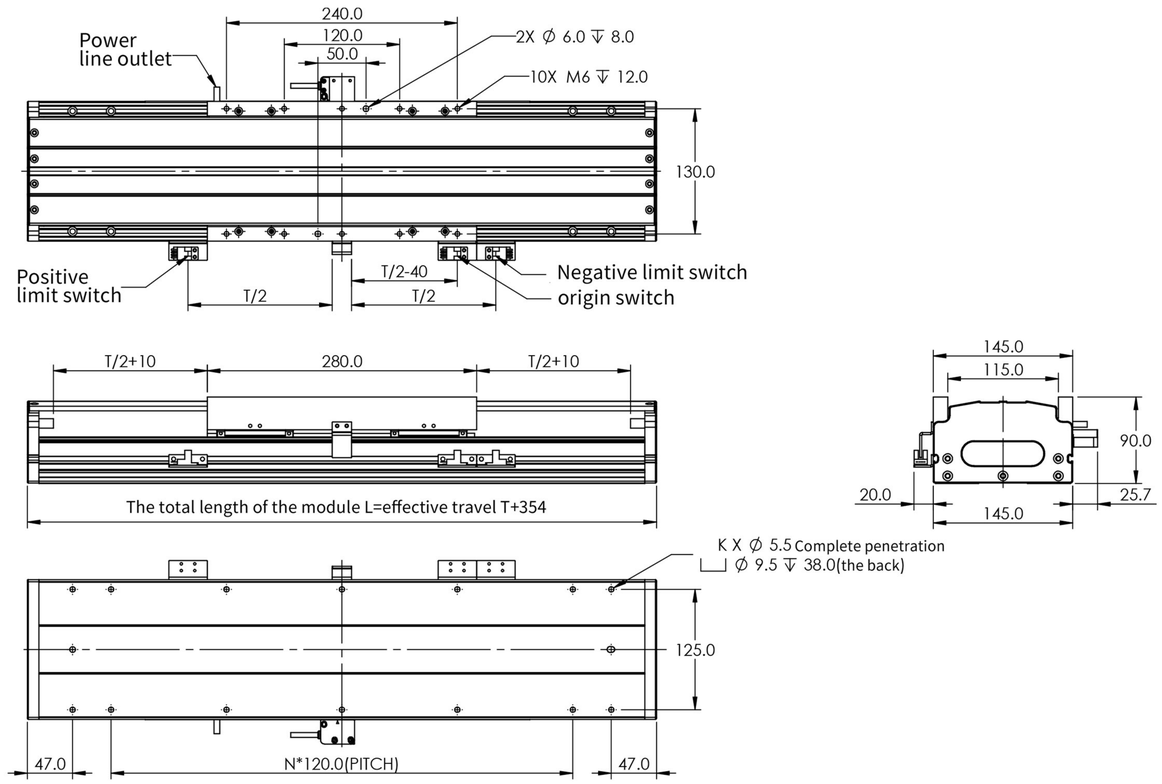

Module Parameters

trip (mm) / parameter	60	120	180	240	300	360	420	480	540	600	660	720	780	840	900	960	1020	1080
K	10	10	10	10	14	14	14	14	18	18	18	18	22	22	22	22	26	26
N	2	2	2	2	4	4	4	4	6	6	6	6	8	8	8	8	10	10
L(mm)	414	474	534	594	654	714	774	834	894	954	1014	1074	1134	1194	1254	1314	1374	1434
kg	11.4	12.4	13.4	14.4	15.4	16.4	17.4	18.4	19.4	20.4	21.4	22.4	23.4	24.4	25.4	26.4	27.4	28.4

J170-JXD096-080-TXXX

Mover dimensions

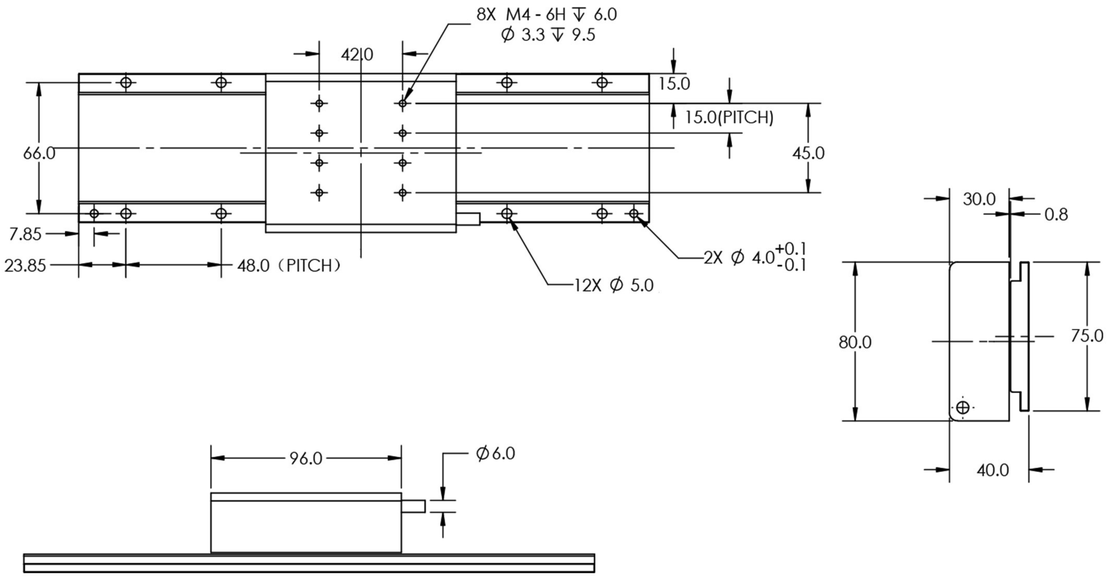

Maximum load : 21KG
(At 300mm trip and 500m/s)

Mover parameters

Performance	Unit	Value
Peak Force	N	406
Continuous Force	N	107
Coil Weight	Kg	1.20
Electrical Cycle Length	mm	24
Peak Current	Arms	10.0
Continuous Current	Arms	2.8
Resistance Phase to Phase @25°	ohms	3.2
Inductance Phase to Phase	mH	16

Module dimensions

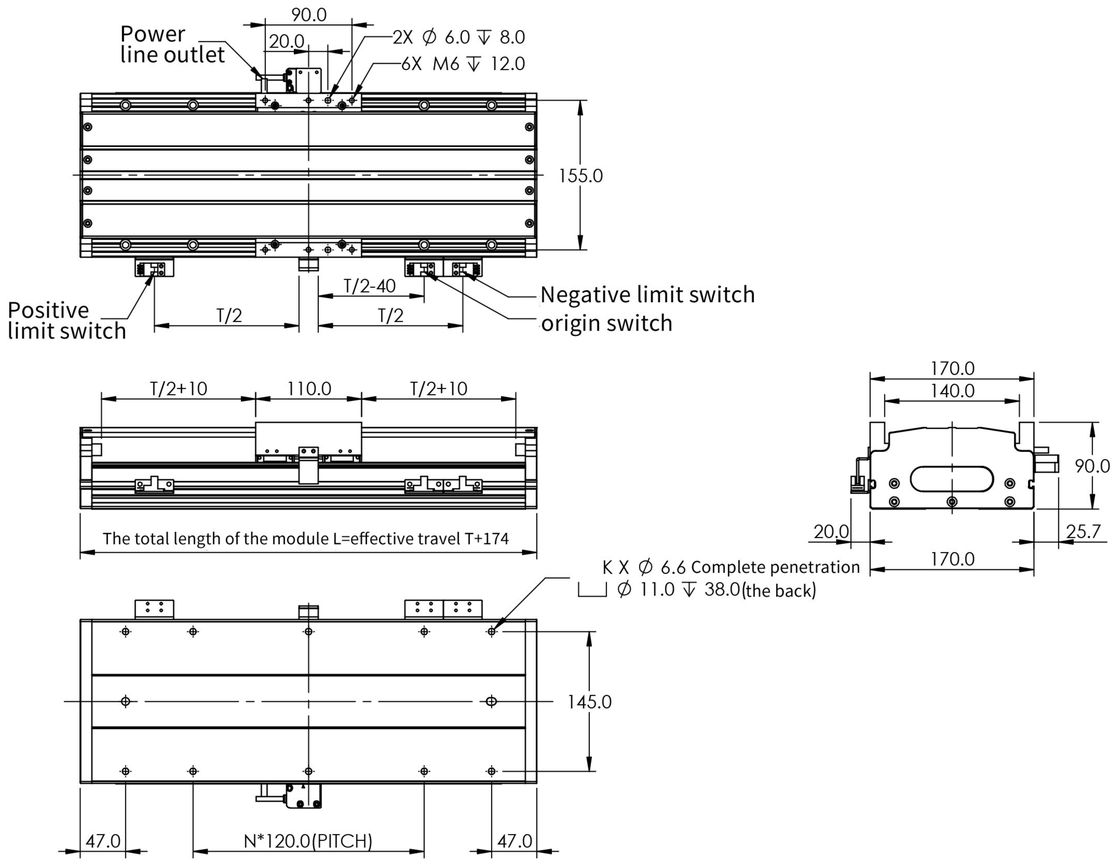

Module Parameters

trip (mm) / parameter	60	120	180	240	300	360	420	480	540	600	660	720	780	840	900	960	1020	1080
K	6	6	6	10	10	10	10	14	14	14	14	18	18	18	18	22	22	22
N	0	0	0	2	2	2	2	4	4	4	4	6	6	6	6	8	8	8
L(mm)	234	294	354	414	474	534	594	654	714	774	834	894	954	1014	1074	1134	1194	1254
kg	6.5	7.7	8.9	10.1	11.3	12.5	13.7	14.9	16.1	17.3	18.5	19.7	20.9	22.1	23.3	24.5	25.7	26.9

J170-JXD180-080-TXXX

Mover dimensions

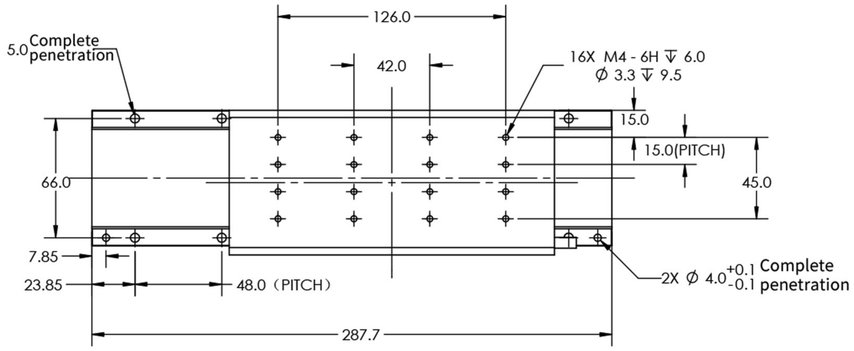

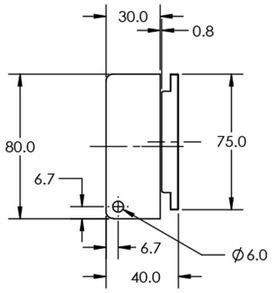

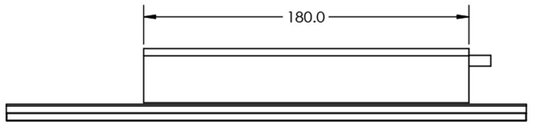

Maximum load : 42KG
(At 300mm trip and 500m/s)

Mover parameters

Performance	Unit	Value
Peak Force	N	830
Continuous Force	N	213
Coil Weight	Kg	2.40
Electrical Cycle Length	mm	24
Peak Current	Arms	10.0
Continuous Current	Arms	2.8
Resistance Phase to Phase @25°	ohms	6.3
Inductance Phase to Phase	mH	31

Module dimensions

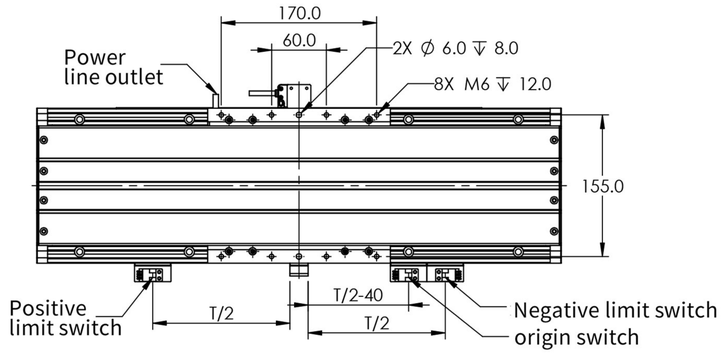

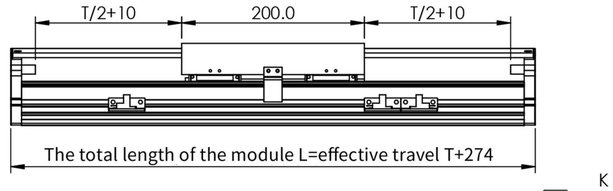

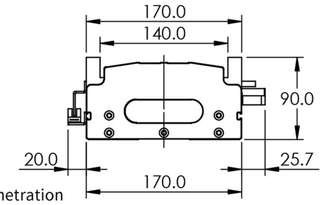

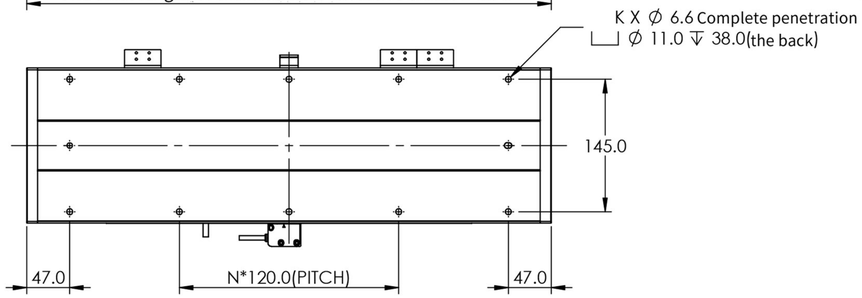

Module Parameters

trip (mm) / parameter	60	120	180	240	300	360	420	480	540	600	660	720	780	840	900	960	1020	1080
K	6	10	10	10	10	14	14	14	14	18	18	18	18	22	22	22	22	26
N	0	2	2	2	2	4	4	4	4	6	6	6	6	8	8	8	8	10
L(mm)	334	394	454	514	574	634	694	754	814	874	934	994	1054	1114	1174	1234	1294	1354
kg	10.3	11.5	12.7	13.9	15.1	16.3	17.5	18.7	19.9	21.1	22.3	23.5	24.7	25.9	27.1	28.3	29.5	30.7

J170-JXD266-080-TXXX

Mover dimensions

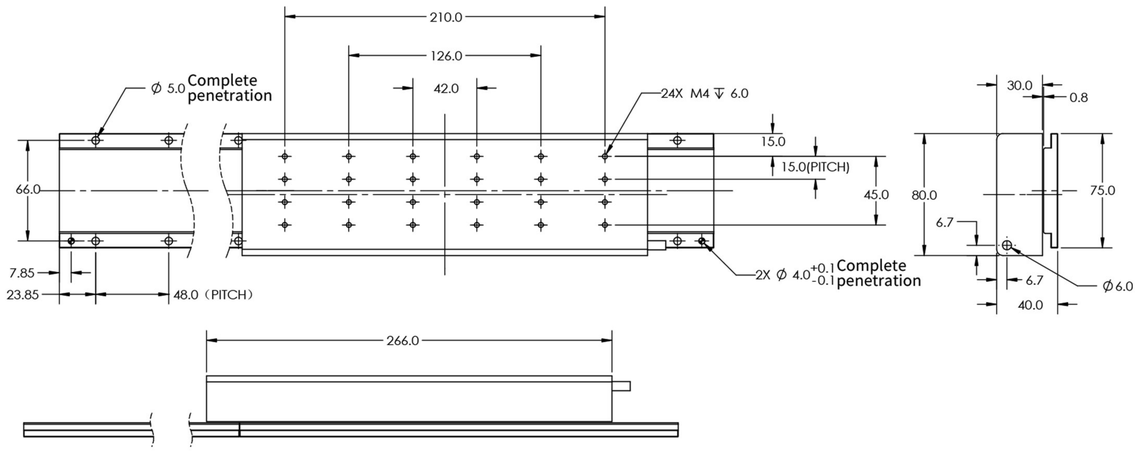

Maximum load : 96KG
(At 300mm trip and 500m/s)

Mover parameters

Performance	Unit	Value
Peak Force	N	1129.0
Continuous Force	N	316.0
Coil Weight	Kg	3.7
Electrical Cycle Length	mm	24
Peak Current	Arms	10.0
Continuous Current	Arms	2.8
Resistance Phase to Phase @25°	ohms	9.2
Inductance Phase to Phase	mH	48.0

Module dimensions

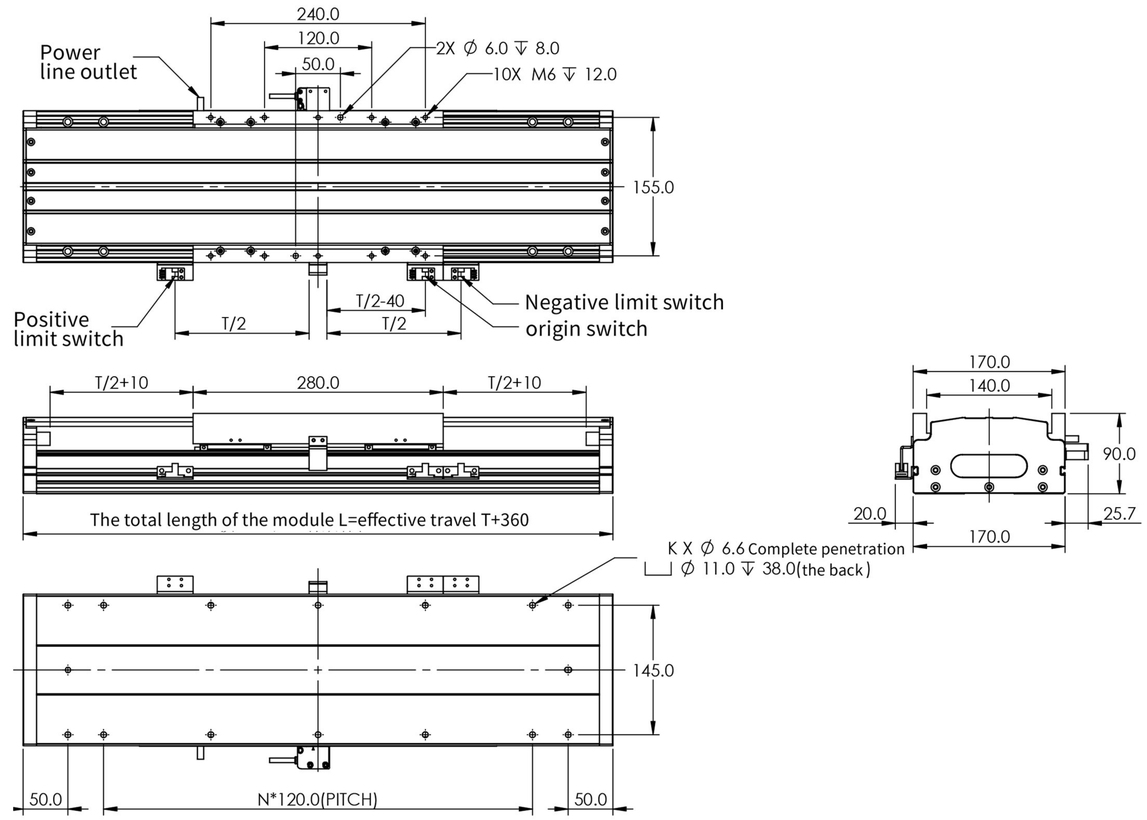

Module Parameters

trip (mm) / parameter	60	120	180	240	300	360	420	480	540	600	660	720	780	840	900	960	1020	1080
K	10	10	10	10	14	14	14	14	18	18	18	18	22	22	22	22	26	26
N	2	2	2	2	4	4	4	4	6	6	6	6	8	8	8	8	10	10
L(mm)	414	474	534	594	654	714	774	834	894	954	1014	1074	1134	1194	1254	1314	1374	1434
kg	14.2	15.4	16.6	17.8	19	20.2	21.4	22.6	23.8	25	26.2	27.4	28.6	29.8	31	32.2	33.4	34.6

J210-JXD096-100-TXXX

Mover dimensions

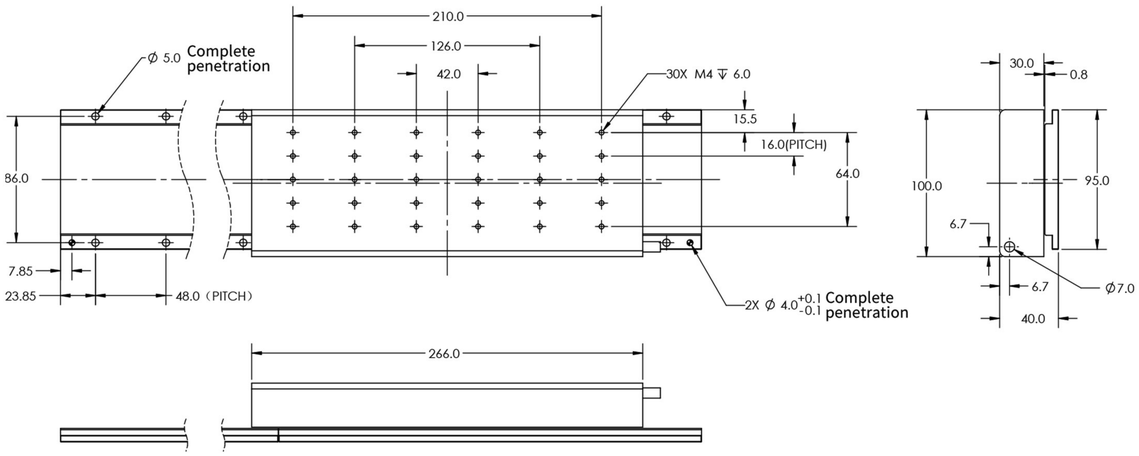

Maximum load : 27KG
(At 300mm trip and 500m/s)

Mover parameters

Performance	Unit	Value
Peak Force	N	1600.0
Continuous Force	N	400
Coil Weight	Kg	4.9
Electrical Cycle Length	mm	24
Peak Current	Arms	20.0
Continuous Current	Arms	5.0
Resistance Phase to Phase @25°	ohms	3.0
Inductance Phase to Phase	mH	16.0

Module dimensions

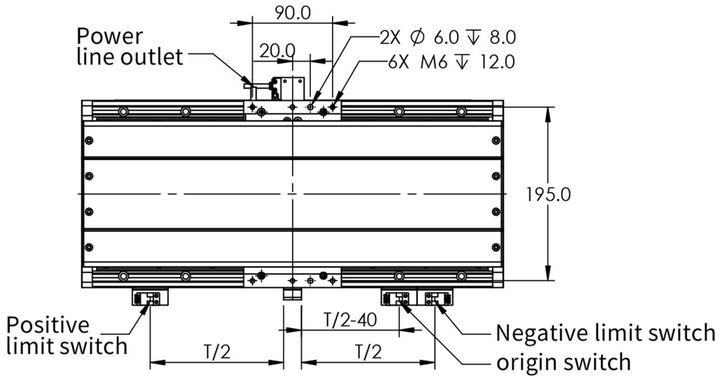

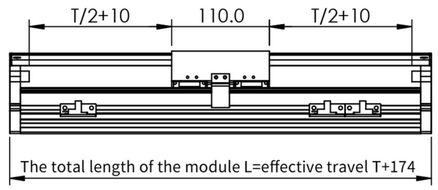

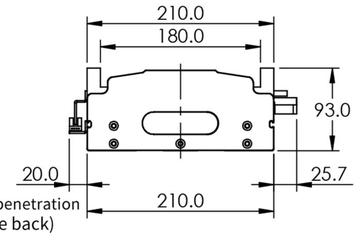

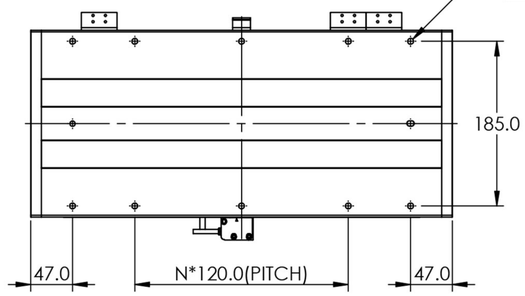

Module Parameters

trip (mm) / parameter	60	120	180	240	300	360	420	480	540	600	660	720	780	840	900	960	1020	1080
K	6	6	6	10	10	10	10	14	14	14	14	18	18	18	18	22	22	22
N	0	0	0	2	2	2	2	4	4	4	4	6	6	6	6	8	8	8
L(mm)	234	294	354	414	474	534	594	654	714	774	834	894	954	1014	1074	1134	1194	1254
kg	8.4	9.85	11.3	12.75	14.2	15.65	17.1	18.55	20	21.45	22.9	24.35	25.8	27.25	28.7	30.15	31.6	33.05

J210-JXD180-100-TXXX

Mover dimensions

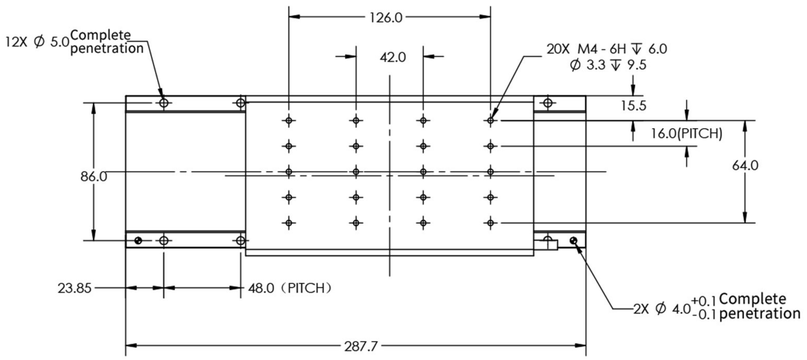

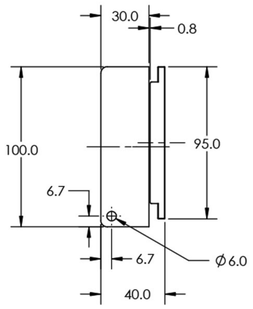

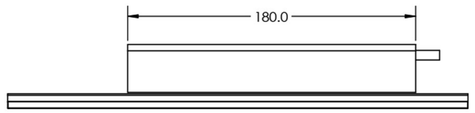

Maximum load : 80KG
(At 300mm trip and 500m/s)

Mover parameters

Performance	Unit	Value
Peak Force	N	1125
Continuous Force	N	267
Coil Weight	Kg	3.20
Electrical Cycle Length	mm	24
Peak Current	Arms	10.0
Continuous Current	Arms	2.6
Resistance Phase to Phase @25°	ohms	7.8
Inductance Phase to Phase	mH	42

Module dimensions

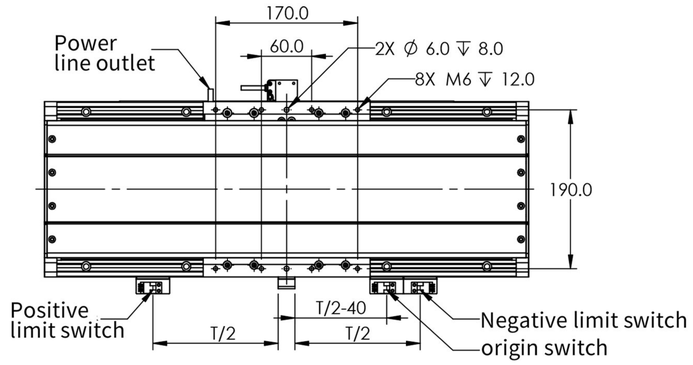

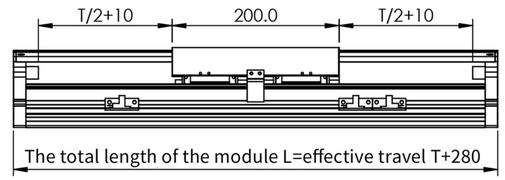

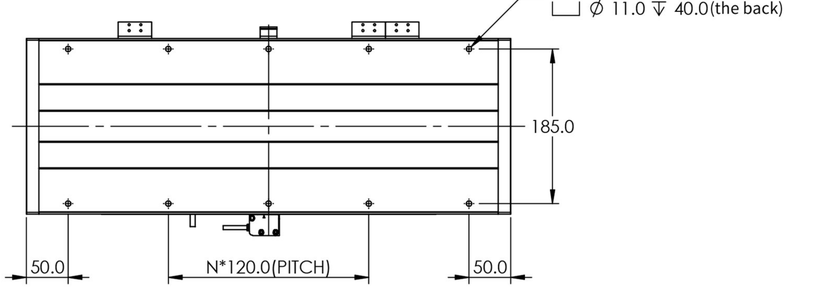

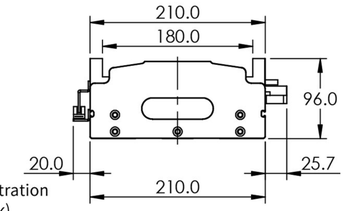

Module Parameters

trip (mm) / parameter	60	120	180	240	300	360	420	480	540	600	660	720	780	840	900	960	1020	1080
K	6	10	10	10	10	14	14	14	14	18	18	18	18	22	22	22	22	26
N	0	2	2	2	2	4	4	4	4	6	6	6	6	8	8	8	8	10
L(mm)	340	400	460	520	580	640	700	760	820	880	940	1000	1060	1120	1180	1240	1300	1360
kg	15.16	16.62	18.08	19.54	21	22.46	23.92	25.38	26.84	28.3	29.76	31.22	32.68	34.14	35.6	37.06	38.52	39.98

J210-JXD180-266-TXXX

Mover dimensions

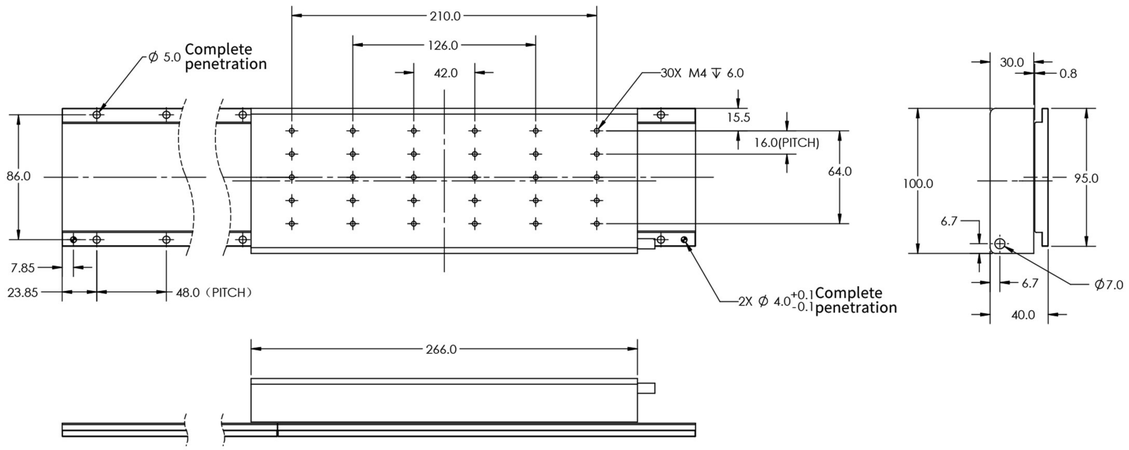

Maximum load : 120KG
(At 300mm trip and 500m/s)

Mover parameters

Performance	Unit	Value
Peak Force	N	1600
Continuous Force	N	400
Coil Weight	Kg	4.9
Electrical Cycle Length	mm	24
Peak Current	Arms	20.0
Continuous Current	Arms	5.0
Resistance Phase to Phase @25°	ohms	3.0
Inductance Phase to Phase	mH	16.0

Module dimensions

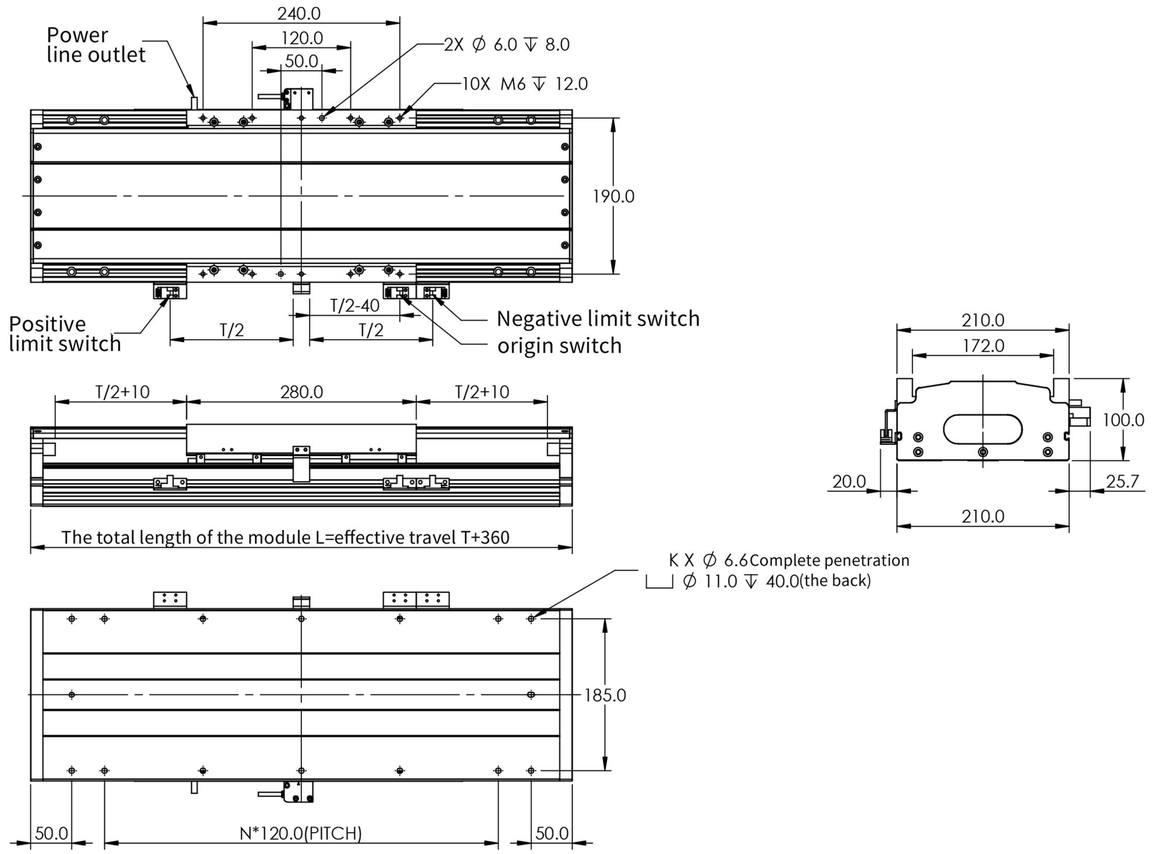

Module Parameters

trip (mm) / parameter	60	120	180	240	300	360	420	480	540	600	660	720	780	840	900	960	1020	1080
K	10	10	10	10	14	14	14	14	18	18	18	18	22	22	22	22	26	26
N	2	2	2	2	4	4	4	4	6	6	6	6	8	8	8	8	10	10
L(mm)	420	480	540	600	660	720	780	840	900	960	1020	1080	1140	1200	1260	1320	1380	1440
kg	20.74	22.23	23.72	25.21	26.7	28.19	29.68	31.17	32.66	34.15	35.64	37.13	38.62	40.11	41.6	43.09	44.58	46.07